■

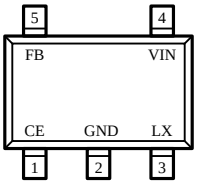

SOT23-5L
(TOP VIEW)

■

■

1

VIN=5.0V, VOUT=3.3V, IL=2.0A

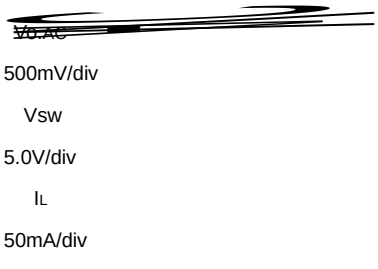

2 CE

VIN=5.0V, VOUT=3.3V, IL=2.0A

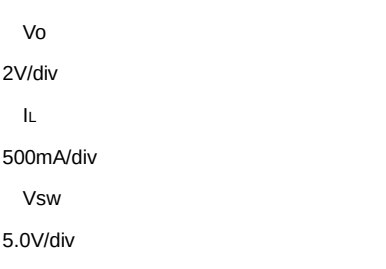

3 CE

VIN=5.0V, VOUT=3.3V, IL=2.0A

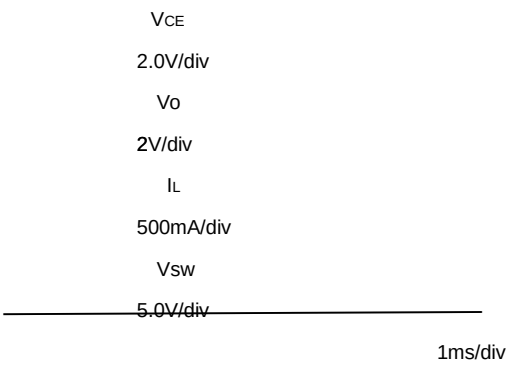

4

VIN=5.0V, VOUT=3.3V, IL=1mA

■ 概述

PFM

XT3420 XT3420 PFM PFM PWM/PFM CMOS DC/DC 2.5V~5.5V 0.6V 2A XT3420 CE 0.7V XT3420 PMOSFET NMOSFET 1uA OSC FB EA XT3420 PWM FB PWM

■

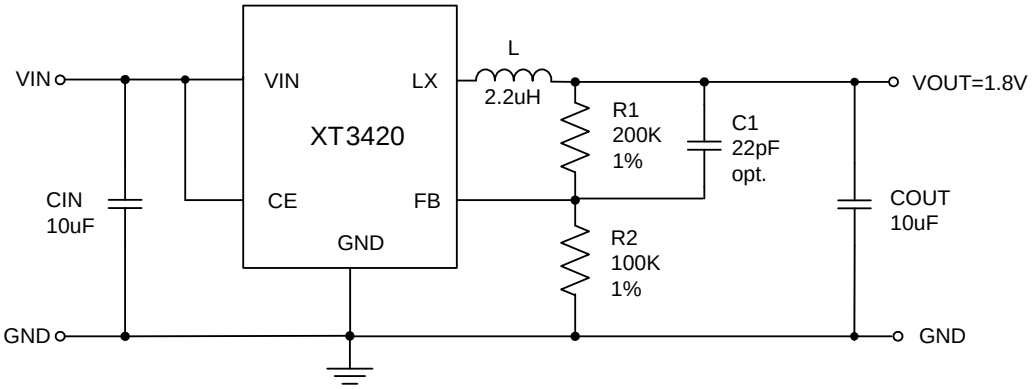

C1

■ PCB

PCB

1 VIN SW GND

2

3 VOUT

4 PCB

■

SOT23-5L

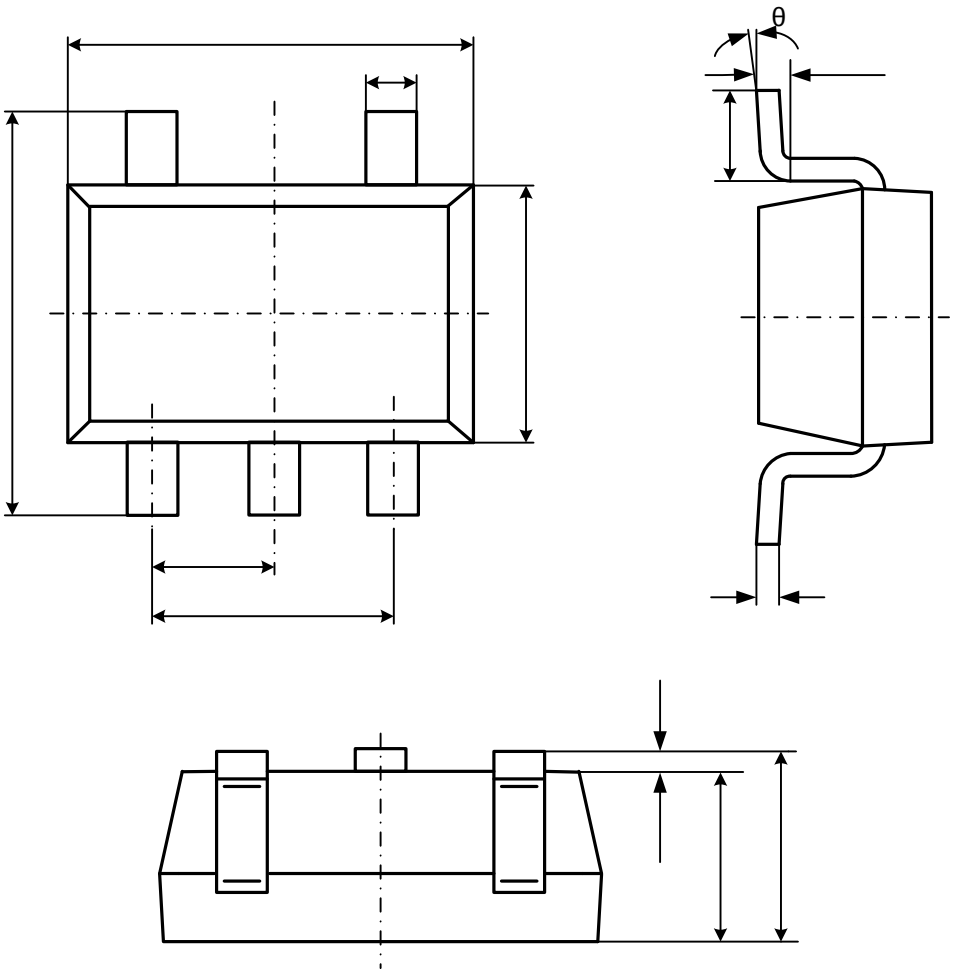

Symbol	Dimensions In Millimeters		Dimensions In Inches	
	Min	Max	Min	Max
A	1.050	1.250	0.041	0.049
A1	0.000	0.100	0.000	0.004
A2	1.050	1.150	0.041	0.045
b	0.300	0.500	0.012	0.020
c	0.100	0.200	0.004	0.008
D	2.820	3.020	0.111	0.119
E	1.500	1.700	0.059	0.067
E1	2.650	2.950	0.104	0.116
e	0.950(BSC)		0.037(BSC)	
e1	1.800	2.000	0.071	0.079
L	0.300	0.600	0.012	0.024
θ	0°	8°	0°	8°