XT2106 LCD

MOSFET LED

LED

CE PWM

MOS

PWM

SOT23-6L

DFN1010-4L

XT2106A -



M SOT23-6L

(TA=25

LED ϕ̈

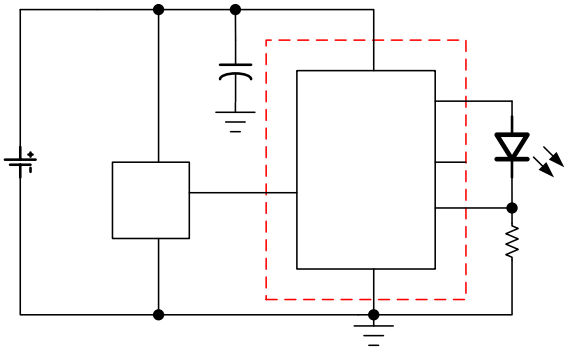

LED ₮ ILED=0.1/RSET

~ 1uF

ÃžÍ&Ø¼ L ϕ̈ 50KHz

LED

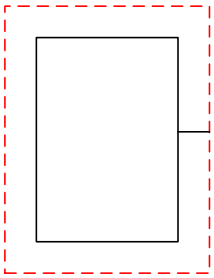

18 BDF7 9 TT BT9( ) 1 R11 0 0 1 103Tm [<127F36FC07791] TJ ET EMC /P <</MCID 27>>0BDC18 BDF7 9 TT 1 0 1 136.

SOT23-6L

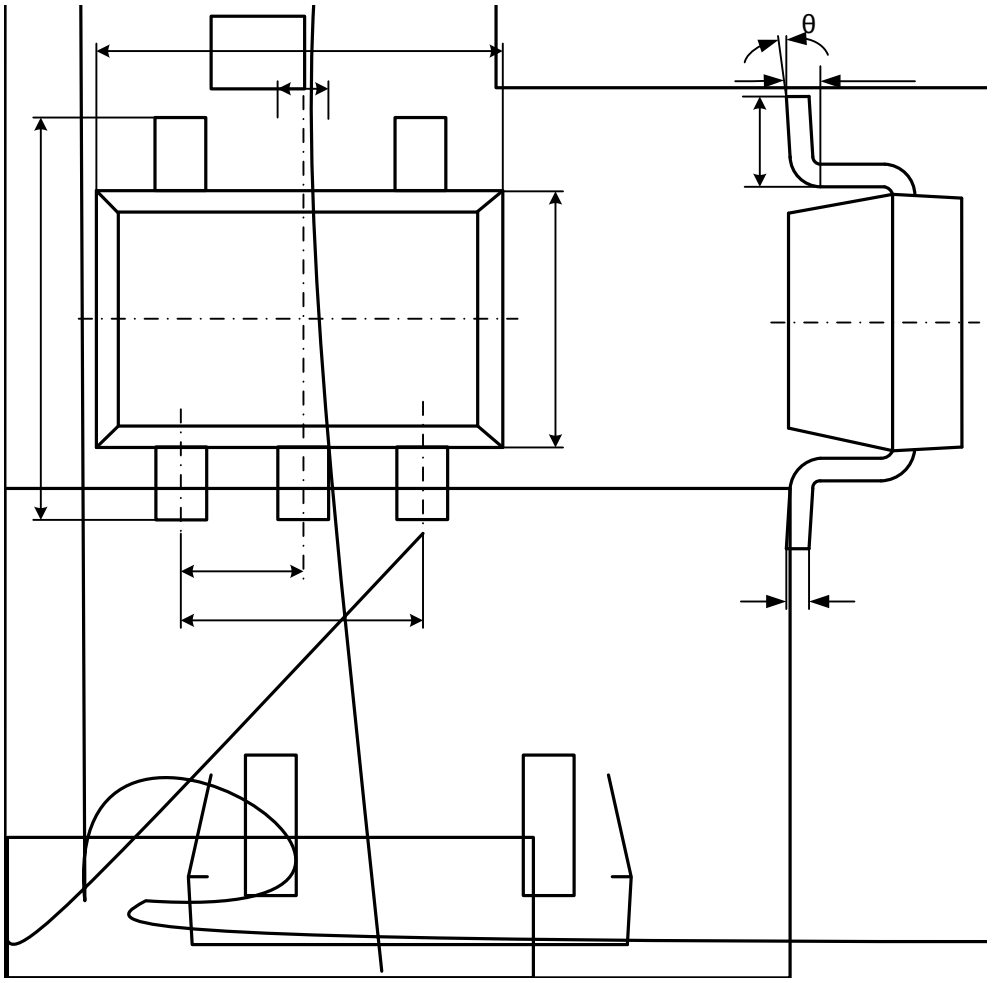

Symbol	Dimensions In Millimeters	Dimensions In Inches