7 8 >˜ × ñ =0

1V '		× ñ =
7	8	
1	0	LN6210XXXXDX

9 >˜+e »B3 ¤ ˜2« »

1V '	2« »	× ñ =
A	Q 9 x Ä µ5ž ; ù+eLk Å	LN6210AXXXDX
B	Q 9 x Ä"Ñ 9 µ5ž+eLk Å	LN6210BXXXDX
C	~ 9 x Ä µ5ž : ù+eLk Å	LN6210CXXXDX
D	~ 9 x Ä"Ñ 9 µ5ž+eLk Å	LN6210DXXXDX

: >˜EÃ *+e »,´ ¤ }

» ² Ö 3 >˜ 3.x,5 >˜ 5.x ×

; >˜EÃ *+e »,´ ?

1V '	+e » ÄV Å	× ñ =	1V '	+e » ÄV Å	× ñ =
0	X.0	LN6210XX0XDX	A	X.05	LN6210XXAXDX
1	X.1	LN6210XX1XDX	B	X.15	LN6210XXBXDX

■ 3.0V

1 ÃEÃ *+e »-EÃ *+e#q ÄCOE-+e#q Î Ð & Å

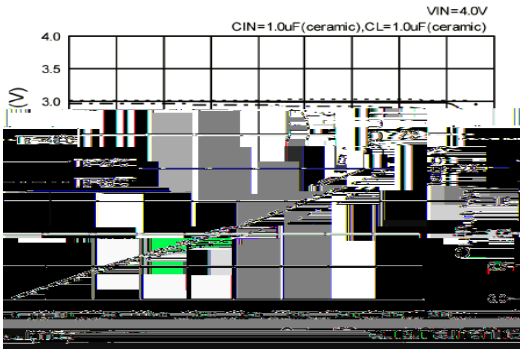

2 ÃEÃ •+e » ¼EÃ* +e »

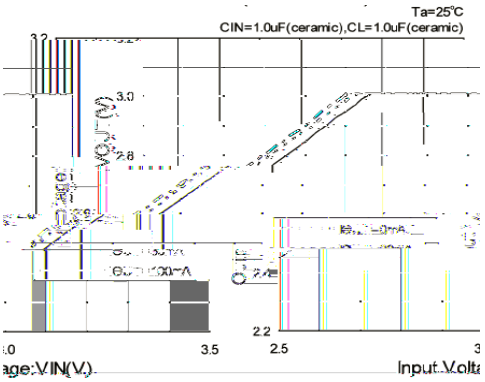

3 ÃDropout +e » ¼EÃ*+e#q

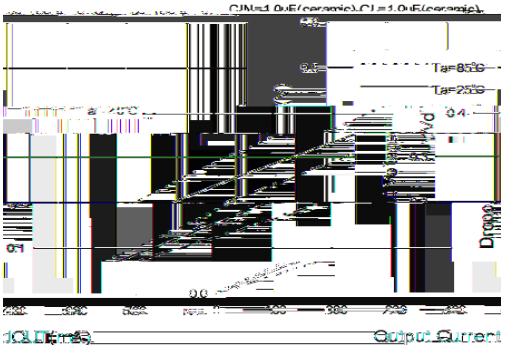

4 ÃEÃ •+e#q ¼EÃ •+e »

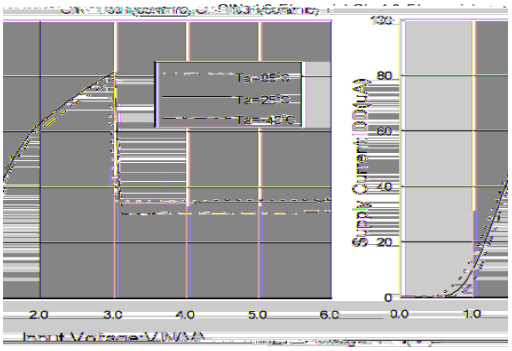

5 ÃEÃ *+e » ¼)ß ³$Y Ö

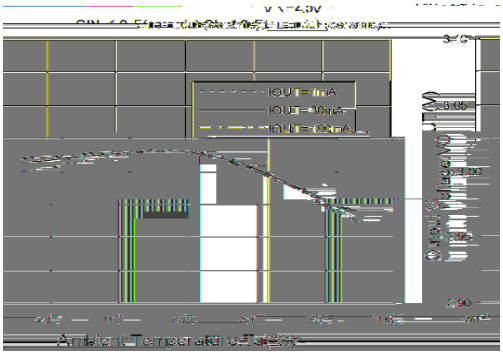

6 Ã4é# Á f



7 Ã-Ü 1 ý Ä

EÃ •-Ü 1 ý Ä

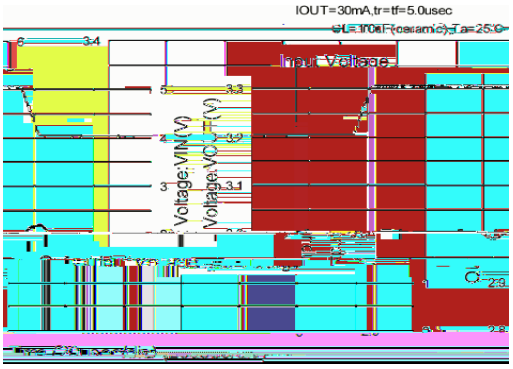

COE--Ü 1 ý Ä

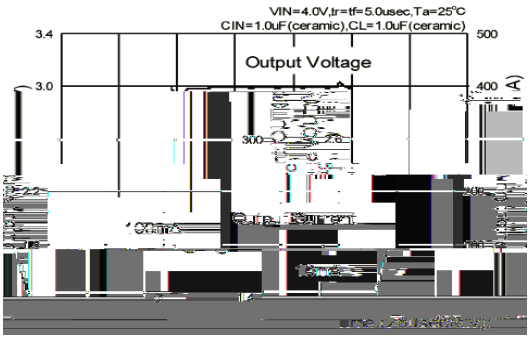

■

SOT23-5L

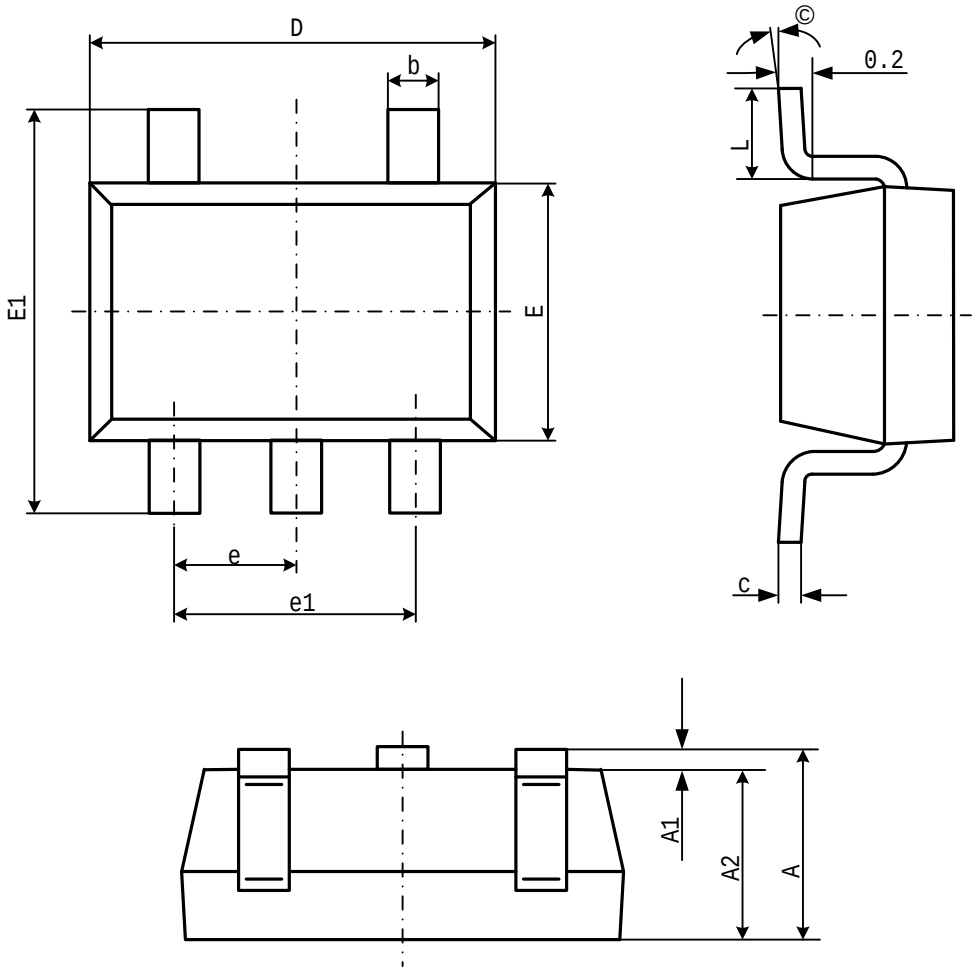

Symbol	Dimensions In Millimeters		Dimensions In Inches	
	Min	Max	Min	Max
A	1.050	1.250	0.041	0.049
A1	0.000	0.100	0.000	0.004
A2	1.050	1.150	0.041	0.045
b	0.300	0.500	0.012	0.020
c	0.100	0.200	0.004	0.008
D	2.820	3.020	0.111	0.119
E	1.500	1.700	0.059	0.067
E1	2.650	2.950	0.104	0.116
e	0.950(BSC)		0.037(BSC)	
e1	1.800	2.000	0.071	0.079
L	0.300	0.600	0.012	0.024
θ	0°	8°	0°	8°

DFN1820-6L

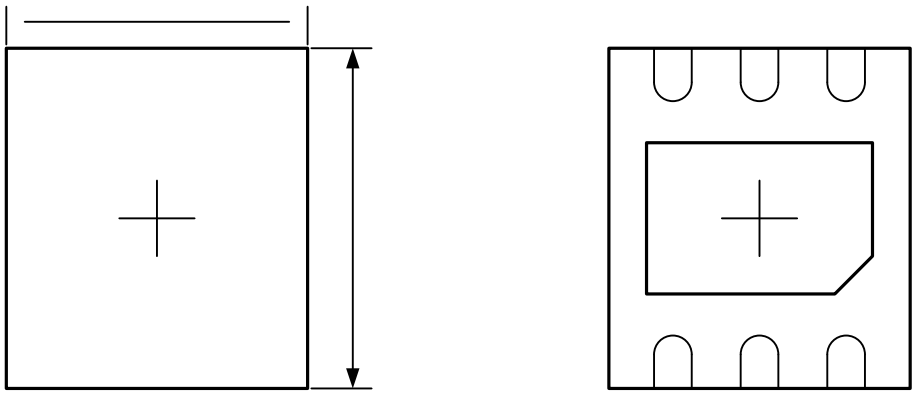

Symbol	Dimensions In Millimeters	Dimensions In Inches

SOT89-5L

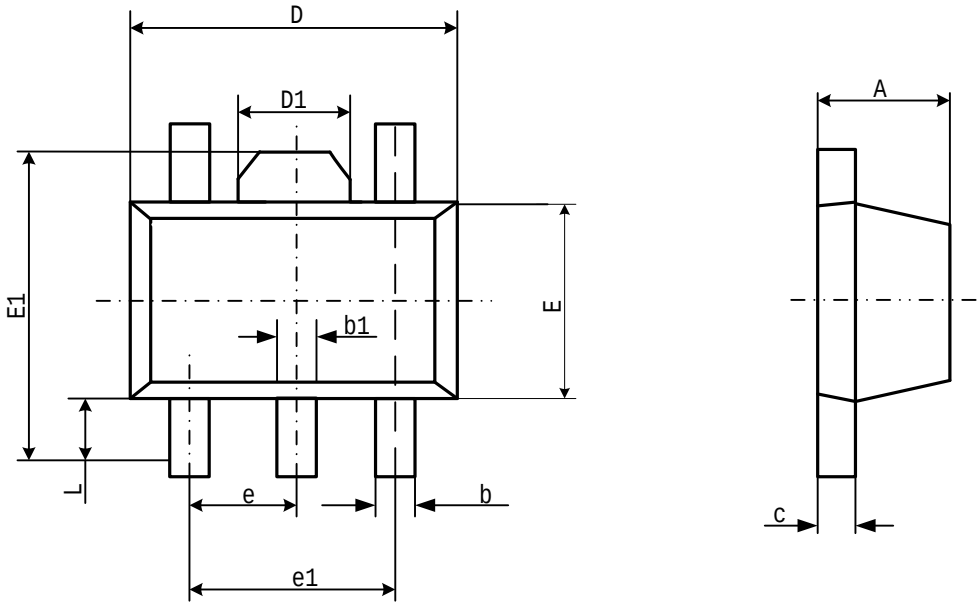

Symbol	Dimensions In Millimeters		Dimensions In Inches	
	Min	Max	Min	Max
A	1.400	1.600		