PWM DC/DC

■

LN2262 DC/DC
PWM

LN2262 3.5V
1100mA 21uA 90

2.5A

■

MP3PDA

DSC LCD

■

1MHz
90
2.5V~5.5V ±2.0%
21εA
0.01εA

■

SOT23-6L

■

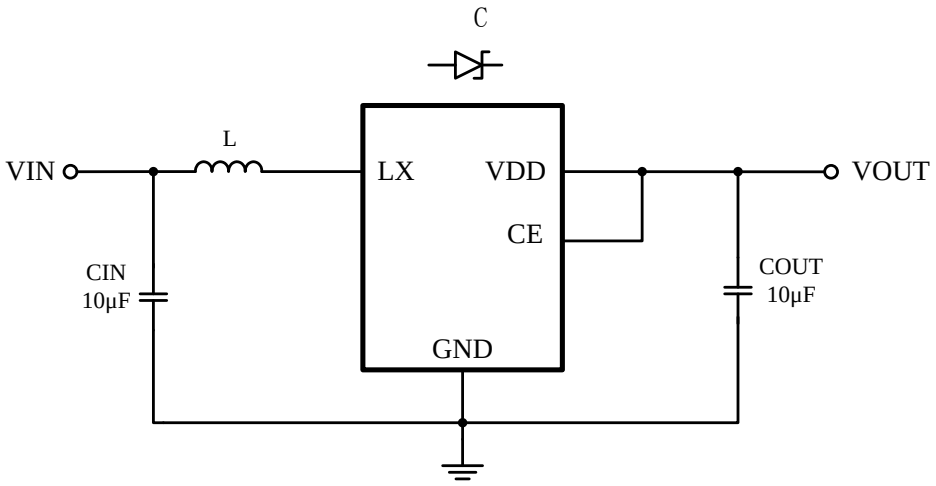

■

LN2262P -



K

■

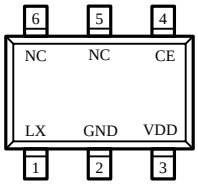

SOT23-6L
(TOP VIEW)

■

[redacted]

[redacted]

1	2.1	B	3.1	P	4.1
2	2.2	C	3.2	Q	4.2
3	2.3	D	3.3	R	4.3

■

	VDD	Vss-0.3 Vss+7	V
	VOUT	Vss-0.3 Vss+7	
	VLX	Vss-0.3 Vss+7	
LX	ILX	2.5	A
	PD SOT23-6L	250	mW
	Topr	-40 80	
	Tstg	-40 125	

■

0 (VIN=CE=3.6V,VOUT=5.0V)

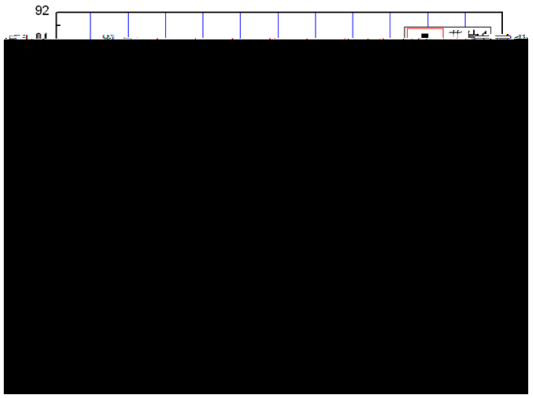

1



2

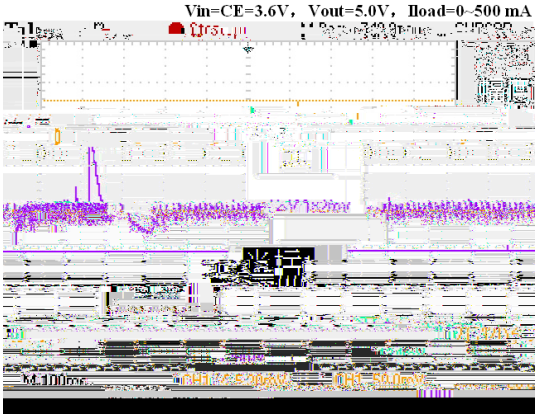

3

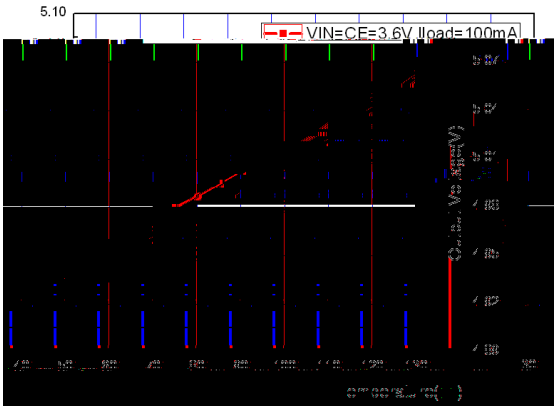

4 UHM U UNTS 4 U

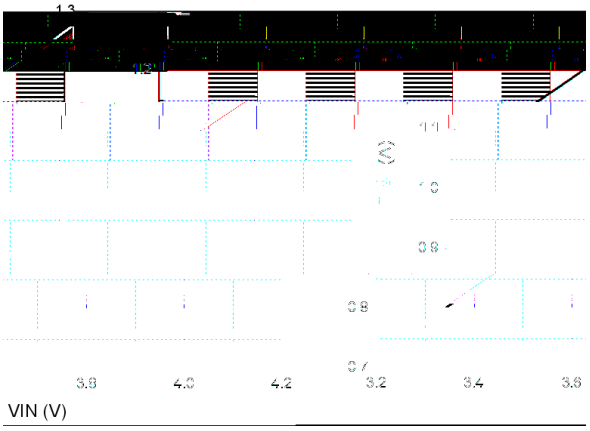

■

SOT23-6L

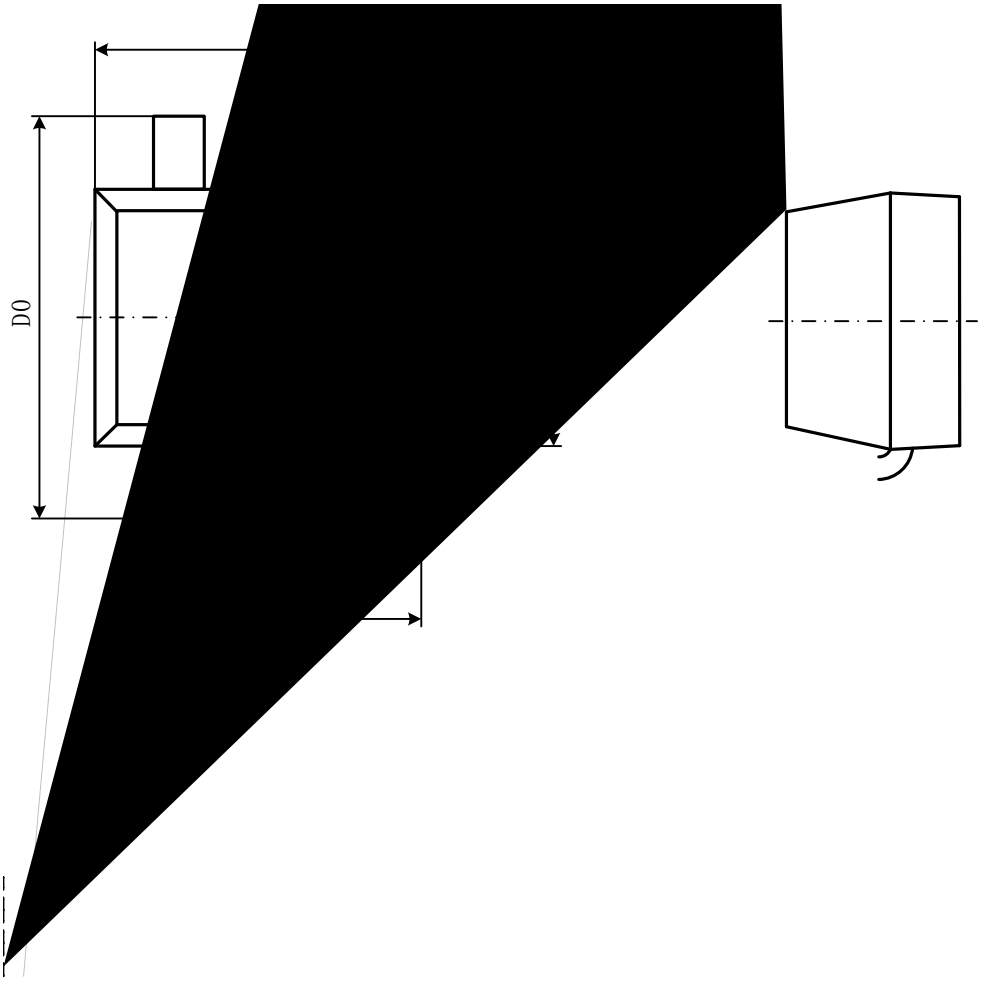

Symbol	Dimensions In Millimeters	Dimensions In Inches