2A, 4.5V-20V Input 1MHz Synchronous Step-Down Converter

■ General Description

LN3492 is a fully integrated, highï efficiency 2A synchronous rectified step-down converter. The LN3492 operates at high efficiency over a wide output current load range.

This device offers two operation modes, PWM control and PFM Mode switching control, which allows a high efficiency over the wider range of the load.

The LN3492 requires a minimum number of readily available standard external components and is available in an 6-pin SOT23 ROHS compliant package.

■ Applications

- Distributed Power Systems
- Digital Set Top Boxes
- Flat Panel Television and Monitors
- Wireless and DSL Modems
- Notebook Computer

■ Features

- High Efficiency: Up to 96%
- 1MHz Frequency Operation
- 2A Output Current
- No Schottky Diode Required
- 4.5V to 20V Input Voltage Range
- 0.6V Reference
- Slope Compensated Current Mode Control for Excellent Line and Load Transient Response
- Integrated internal compensation
- Stable with Low ESR Ceramic Output Capacitors
- Over Current Protection with Hiccup-Mode
- Thermal Shutdown
- Inrush Current Limit and Soft Start
- Available in SOT23-6 Package
- -40°C to +85°C Temperature Range

■ Package

- SOT-23-6L

■ Typical Application Circuit

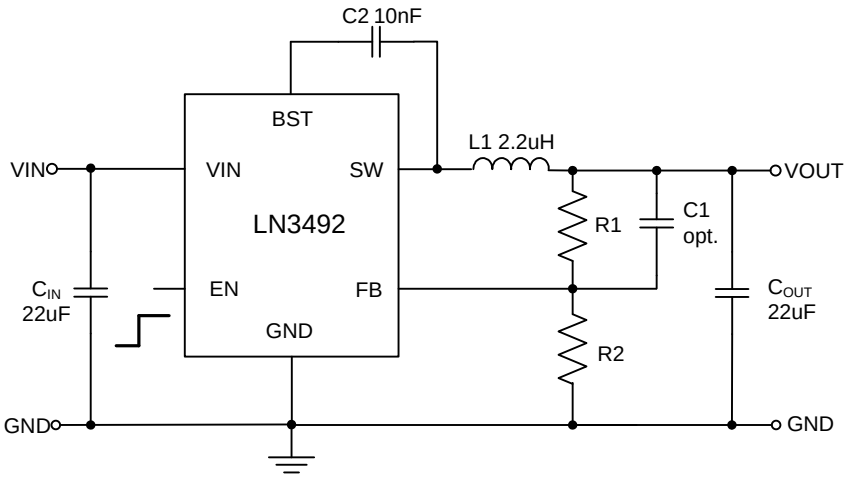

Note: 1. Avoid short between BST and SW

2. 200 kΩ > R1 > 150 kΩ; if R1 is less than 150 kΩ, be sure to use 22uF or greater

3. Input capacitor is recommended to use electrolytic capacitors.

■ Ordering Information

LN3492P

Designator	Symbol	Description
	6	External feedback, Feedback Voltage 0.6V
	8	External feedback, Feedback Voltage 0.8V
	5	Feedback Voltage 0.6V; Frequency 0.5MHz
	M	Package Type :SOT-23-6L

■ Marking Rule

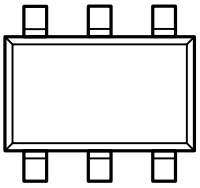

SOT-23-6L
(TOP VIEW)

Represents the product name

Symbol	Product Name
8	LN3492P***

Represents the feedback voltage

Symbol	Description
A	Feedback Voltage 0.6V
C	Feedback Voltage 0.6V; Frequency 0.5M
	Feedback Voltage 0.8V

Represents the packaging information

Symbol	Package
6	SOT23-6L

Represents the assembly lot No.

0-9 A-Z; 0-9 A-Z mirror writing repeated G I J O Q W exception

■ Function Block Diagram

■ Absolute Maximum Ratings

Parameter	Symbol	Maximum Rating		Unit
Input Voltage	V_{IN}	V_{SS}-0.3 V_{SS}+21		V
	$V_{ON/OFF}$	V_{SS}-0.3 V_{IN}+0.3		
SW Voltage		V_{SS}-0.3 V_{IN}+0.3		
BST Voltage		V_{SS}-0.3 SW+6		
FB Voltage		V_{SS}-0.3 V_{SS}+6		
Power Dissipation	P_D	SOT-23-6L	600	mW
Operating Ambient Temperature	Topr	-40 +85		°C
Storage Temperature	Tstg	-40 +125		
ESD HBM (Human Body Mode)		2		KV

■ Electrical Characteristics

Note VIN = 12V, VOUT = 3.3V, unless otherwise specified. Typical values are at TA = 25)

Parameter	Symbol	Condition	Min	Typ	Max	Unit
Input Voltage	V_{IN}		4.5		20	V
Supply Current	I_{SS1}	V_{EN}=2V V_{FB}=0.85V		380		μA
Supply Current	I_Q	V_{IN}=12V V_{OUT}=3.3V No load		410		uA
Supply Shutdown Current	I_{SS2}			1		μA
FB Voltage	V_{FB}	T_A=25°C 4.5V<V_{IN}<18V	0.588			

Line Regulation

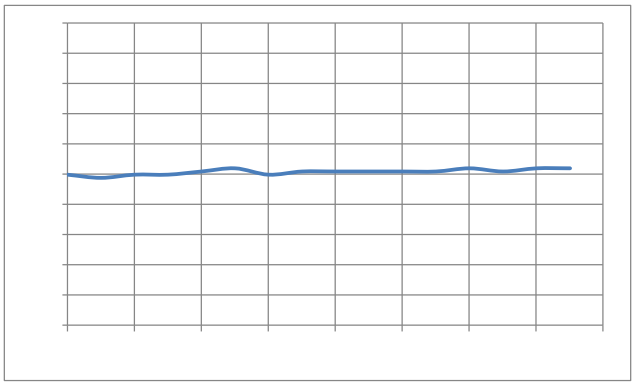

Input Voltage (V)

Line Regulation

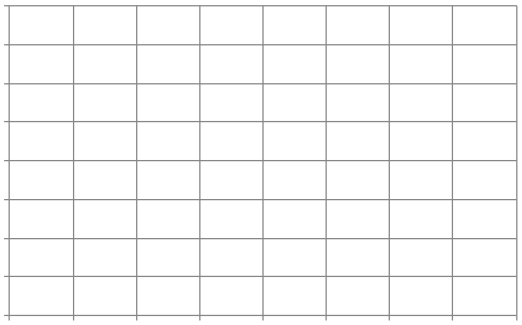

Input Voltage (V)

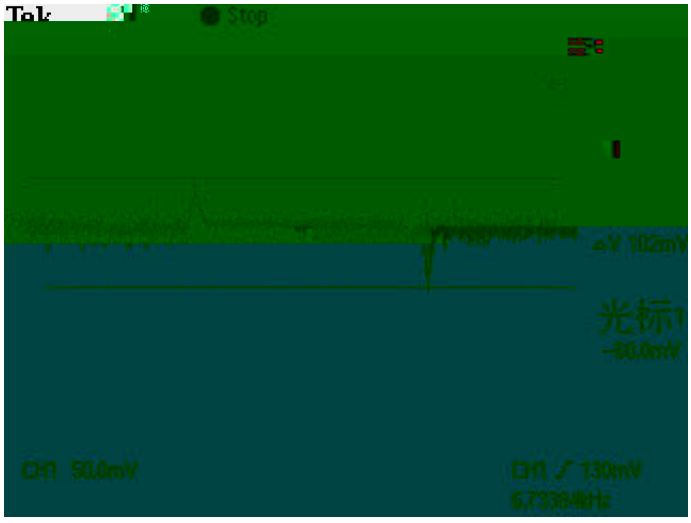

VOUT=3.3V, 1.5A -> 0.2A ->1.5A load jump

■ Functional Description

Internal Regulator

The LN3492 is a current mode step down DC/DC converter that provides excellent transient response with no extra external compensation components. This device contains an internal, low resistance, high voltage power MOSFET, and operates at a high 600K operating frequency to ensure a compact, high efficiency design with excellent AC and DC performance.

EA Amplifier

The error amplifier compares the FB pin voltage with the internal FB reference (VFB) and outputs a current proportional to the difference between the two. This output current is then used to charge or discharge the internal compensation network to form the COMP voltage, which is used to control the power MOSFET current.The optimized internal compensation network minimizes the external component counts and simplifies the control loop design.

Enable

EN is a digital control pin that turns the LN8120 on and off. Drive EN High to turn on the regulator, drive it Low to turn it off. An internal 1MÝ resistor from EN pin to GND allows EN to float to shut down the chip. Connecting the EN pin through a pull up