■

XT4067 /

XT4067 USB
MOSFET

4.2V
1/10
XT4067 USB
XT4067
1μA XT4067
25μA
XT4067
IC

■

PDA MP3

■

500mA
12V
MOSFET
/
USB
4.2V 1%

1/10
25μA
2.8V

■

SOT23-6L
DFN2020-8L

■

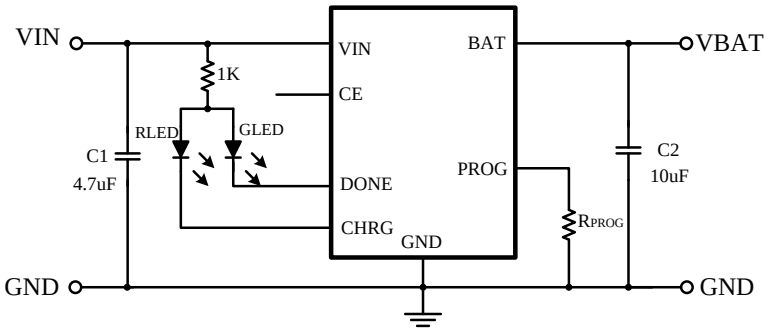

■

XT4067 -

		F				M	SOT23-6L
						D	DFN2020-8L
		42	4.2V			R	
		1	± 1%			L	
						G	

■

SOT23-6L

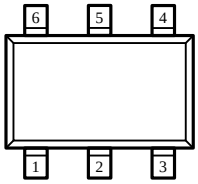

SOT23-6L
(TOP VIEW)

	7F	XT4067F
	A	VBAT ± 1%
	X	

DFN2020

■

■

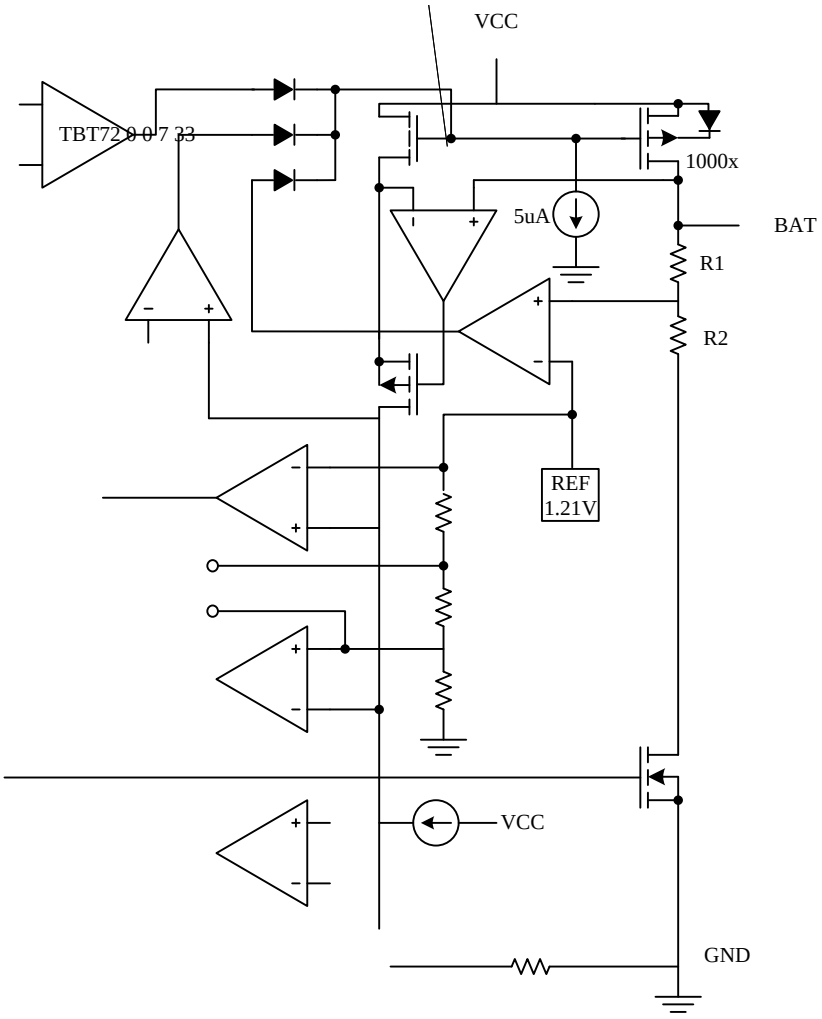
VCC
TBT72 0 0 7 23
1000x
5uA
BAT
R1
R2
REF
1.21V
VCC
GND

■

■

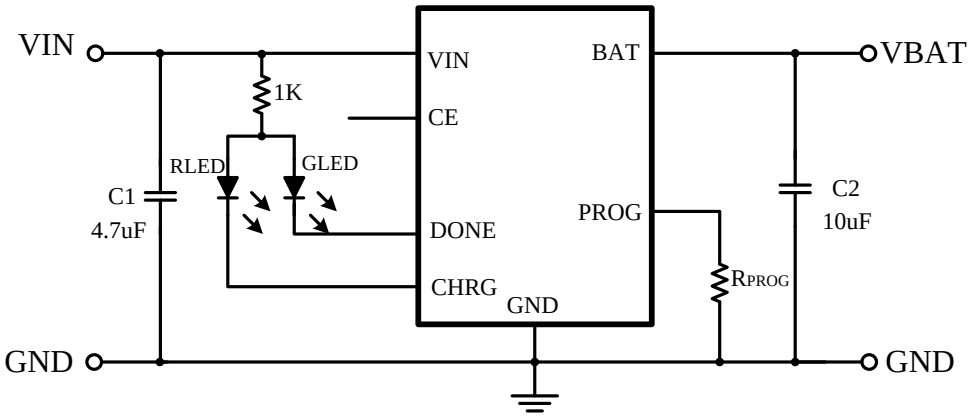

ICH = 1000 / RPROG ICH RPROG PROG

500 RISET = 1000/0.5 = 2K

RPROG 1% PROG

ICH = (VPROG / RPROG) × 1000

4.7uF 10uF PCB

CHRG				
DONE				

■

SOT23-6L

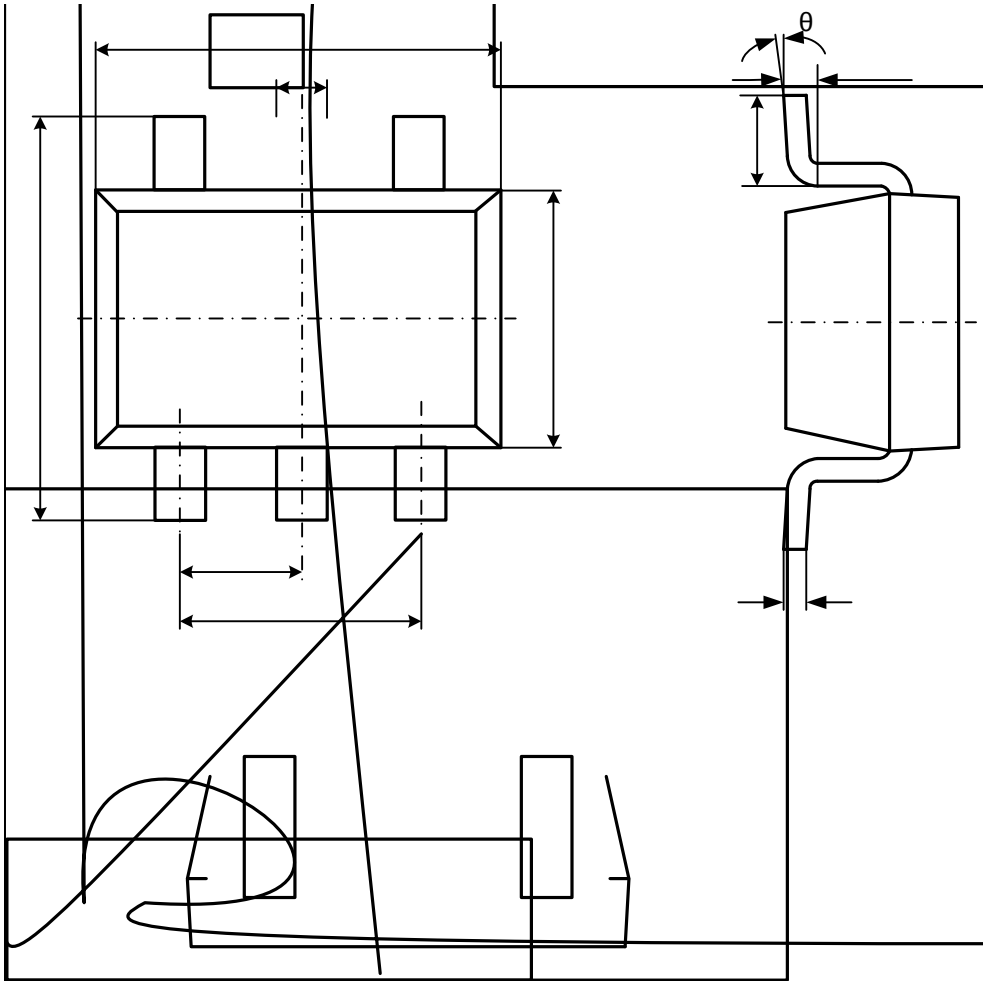

Symbol	Dimensions In Millimeters		Dimensions In Inches	
	Min	Max	Min	Max
Z	1.050	1.250	0.041	0.049
A1	0.000	0.100	0.000	0.004
A2	1.050	1.150	0.041	0.045
b	0.300	0.500	0.012	0.020