■

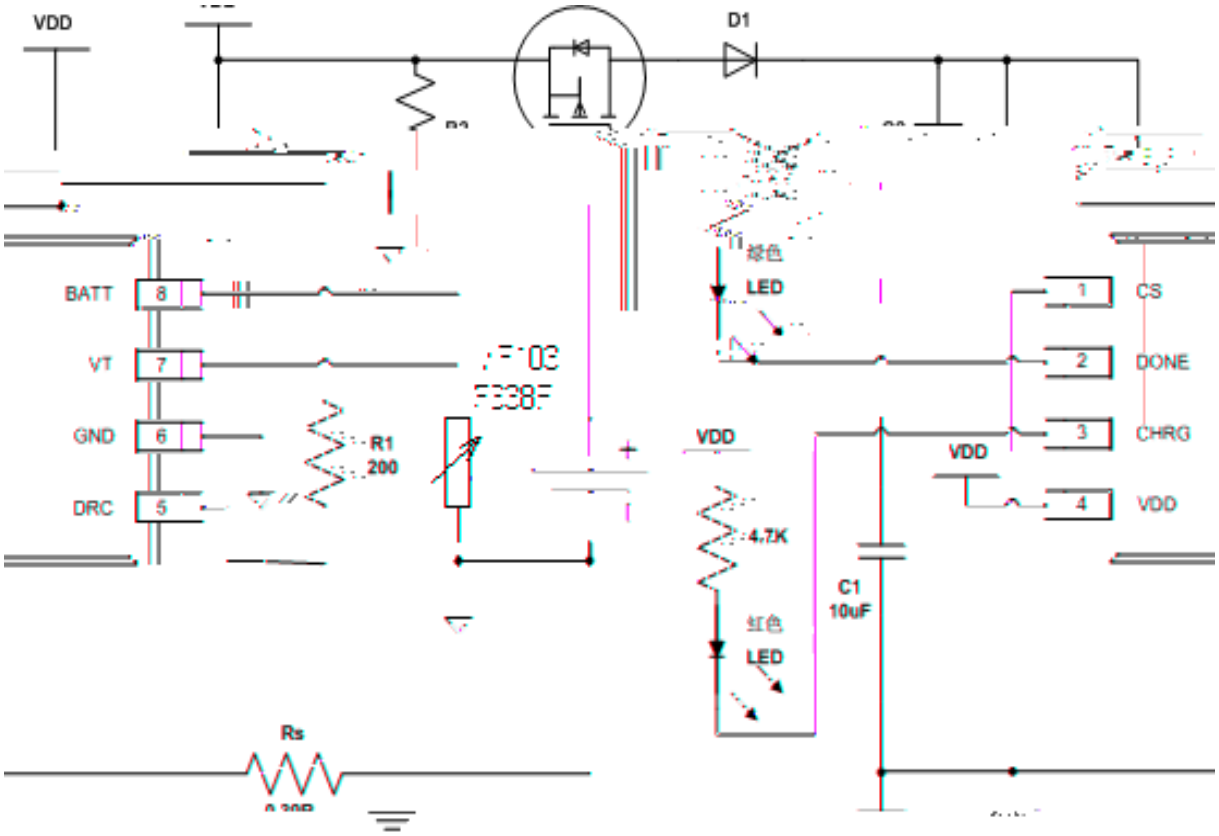
VDD
D1
BATT
8
VT
7
GND
6
DRC
5
R1
200
绿色
LED
1
CS
2
DONE
3
CHRG
4
VDD
VDD
4.7K
C1
10uF
红色
LED
Rs

D1 RS 1% R1 R2

■

■

VDD UVLO SLEEP MODE 20μA VDD UVLO CHRG MODE 6.5V 20

200mv I_{BATT} $\frac{200mV}{R_S}$

VT VT 10K DALE NTHS1206N02 80 50mV, -30 2V LED

					NTC

■

SOP-8

