V 1.0 2021

PDFN5*6-8L



PDFN5*6-8L
(TOP VIEW)

XXXX

						UNIT
	VIN				26.5	V
	Icc	Charge mode,Rprog=2.4K		700	1000	μA
		Shutdown mode Rprog=2.4K TS disabled		115	200	μA

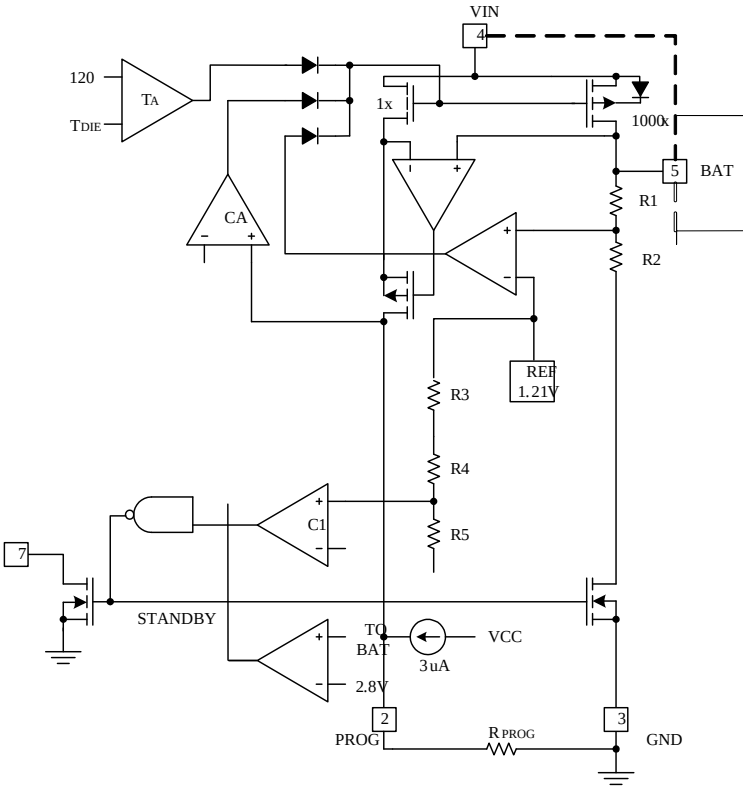

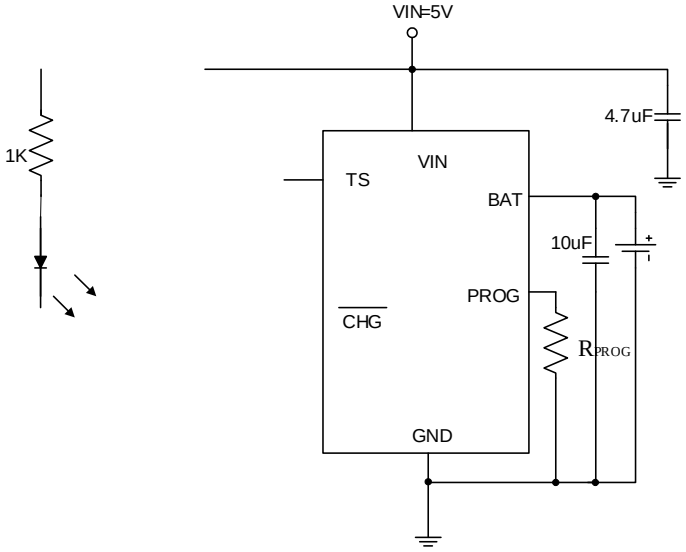

IBAT = (1.2/R_{PROG})*1000

CHRG				
DONE				

1.BAT

Vin=5V Rpog=2K VBAT IBAT

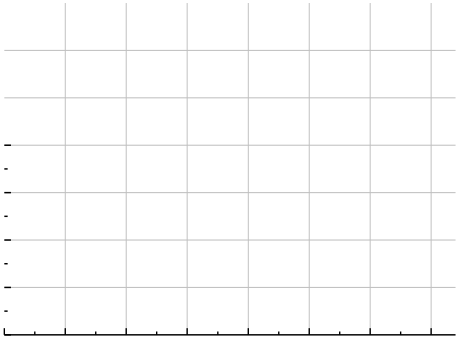

2.BATT

Vin=5V Rpog=2K VBAT=3.6V

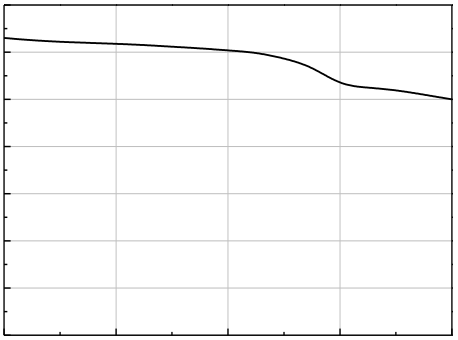

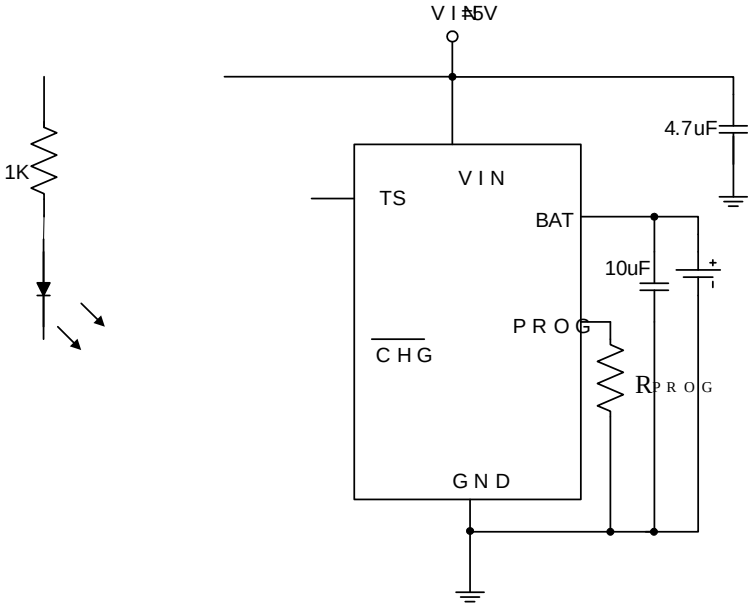

IBAT = 1200 / RPROG IBAT RPROG IREF

500 RPROG = 1200/0.5 = 2.4K

RPROG 1%

R1 R2

R1 R2 TL

TH TL TH) NTC RTL TL RTH TH

RTL RTH TL TEMP

$$V_{TEMPL} = \frac{R_2 / /R_{TL}}{R_1 + R_2 / /R_{TL}} \times Vin$$

TH TEMP $V_{TEMPH} = \frac{R_2 // R_{TH}}{R_1 + R_2 // R_{TH}} \times Vin$

$$VTEMPL = VHIGH = K2 \times VIN(K2 = 0.5)$$

$$V_{TEMPH} = V_{LOW} = K1 \times V_{IN}(K1 = 0.3)$$

$$R1 = \frac{R_{TL}R_{TH}(K2 - K1)}{(R_{TL} - R_{TH})K1K2}$$

$$R2 = \frac{R_{TL}R_{TH}(K2 - K1)}{R_{TL}(K1 - K1K2) - R_{TH}(K2 - K1K2)}$$

PTC RTH RTL

$$R1 = \frac{R_{TL}R_{TH}(K2 - K1)}{(R_{TH} - R_{TL})K1K2}$$

$$R2 = \frac{R_{TL}R_{TH}(K2 - K1)}{R_{TH}(K1 - K1K2) - R_{TL}(K2 - K1K2)}$$

V_{IN} R1 R2 R_{TH} R_{TL} R_{TH} R_{TL}

R2 R1 R1

4.7uF 10uF PCB

RS

RS TS 20K