One Cell Lithium-ion/Polymer Battery Protection IC

■ General Description

The LN8231 provides a high integration solution for lithium-ion/polymer battery protection. The LN8231 contains advanced power MOSFET, high-accuracy voltage detection circuits and delay circuits.

The LN8231 has all the protection functions required in the battery application including over-charging, over-discharging, over-current and load short circuiting protection etc. The low standby current drains little current from the cell while in storage.

The device is targeted for any Li-Ion and Li-Poly battery-powered information appliances requiring long-term battery life.

■ Features

- Protection of Charger Reverse Connection
- Protection of Battery Cell Reverse Connection
- High-accuracy Voltage Detection
- Charger Detection Function
- 0V Battery Charging Enable/Disable Function
- Integrate Advanced Power MOSFET(50m)
- Low Current Consumption

  Operation Mode: 3.0

  Power-

■ Application

- One-Cell Lithium-ion Battery Pack
- Lithium-Polymer Battery Pack

■ Application Information

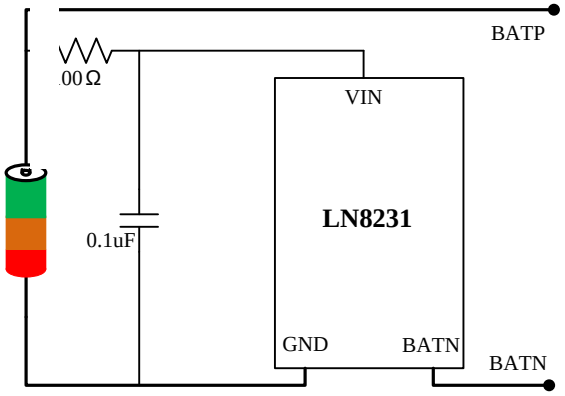

Package

■ Functional Pin Description

Pin	SOT23-5L	Note
1	TM	Test terminal; Floating or Conncet to GND
2	GND	Ground
3	VIN	Power Supply
4	BATN	The negative terminal of battery pack
5	BATN	The negative terminal of battery pack

■

■ Ordering Information

LN8231 - G

■ Marking Information

Designator	Symbol	Description

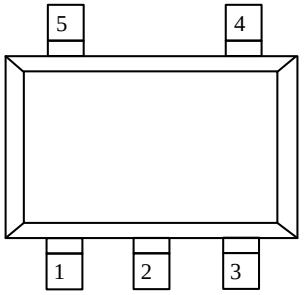

SOT-23-5L
(TOP VIEW)

■ Function Block Diagram

■ Typical Operating Characteristics

T he LN8231 monitors the voltage and current of a battery and protects it from being damaged due to overcharge voltage, over-discharge voltage, over-discharge current, and short circuit conditions by disconnecting the battery from the load or charger. These functions are required in order to operate the battery cell within specified limits.

Normal operating mode

If no exception condition is detected, charging and discharging can be carried out freely. This condition is called the normal operating mode.

Over-Charge Condition

When the battery voltage becomes higher than the over-charge detection voltage (V_{CU}) during charging under normal condition and the state continues for the overcharge detection delay time (t_{CU}) or longer, the LN8231 turns off the power switch FET.

Over-Discharge Condition

When the battery voltage drops below the over-discharge detection voltage (V_{DL}) during discharging under normal condition and it continues for the over-discharge detection delay time (t_{DL}) or longer, the LN8231 turns off the power switch FET and stops discharging. After over-discharging condition,

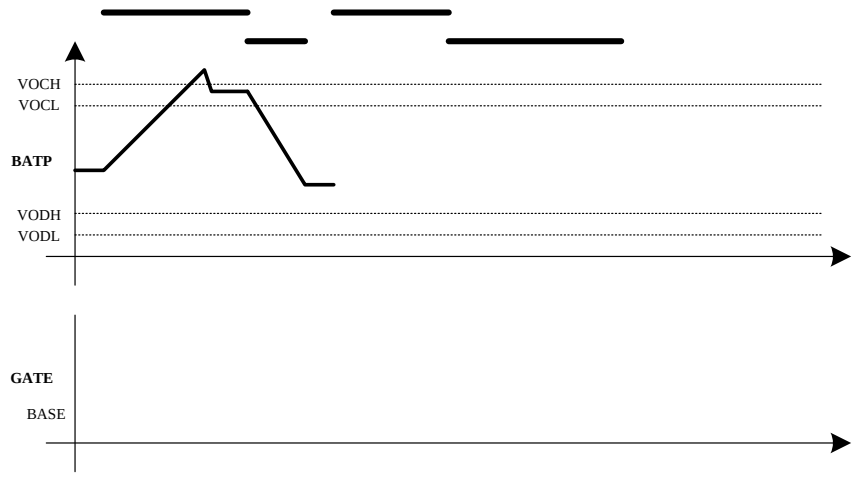
VOCH
VOCL
BATP
VODH
VODL
GATE
BASE

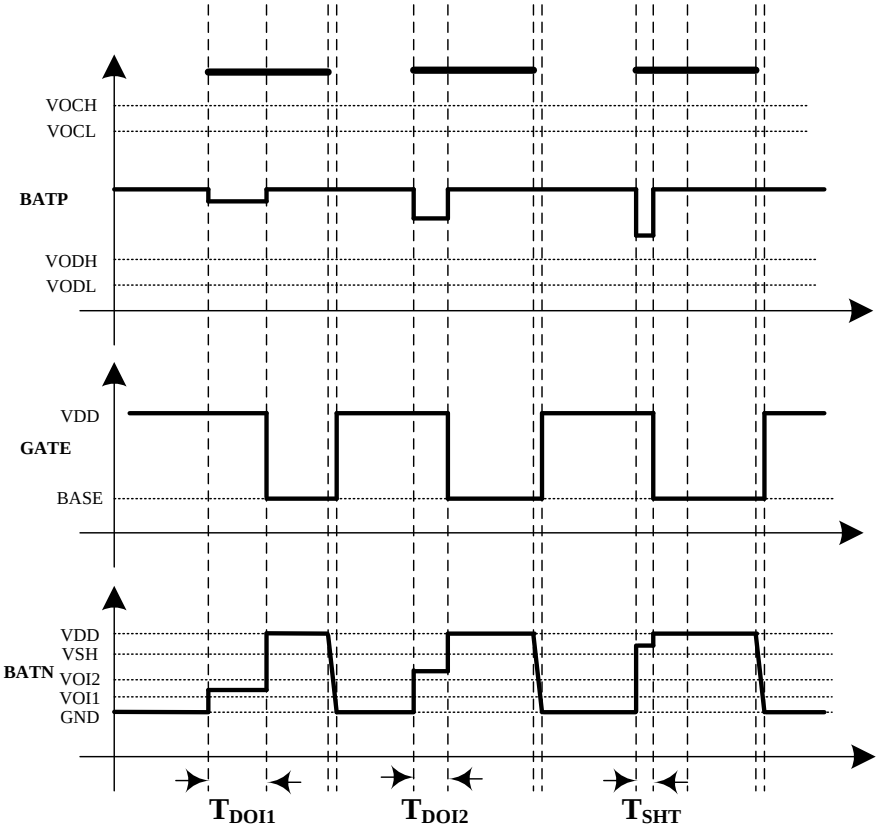
VOCH
VOCL
BATP
VODH
VODL
VDD
GATE
BASE
VDD
VSH
BATN
VOI2
VOI1
GND
TDOI1
TDOI2
TSHT

LN8231