CMOS

■

LN245 CMOS

IC

LN245

“ ”

“ ”

“ ”

“ ”

“ ”

LN245

■

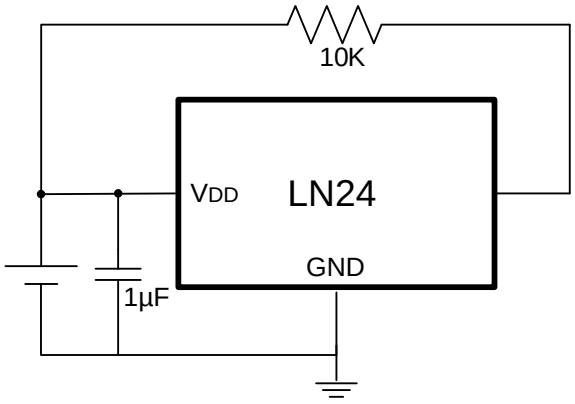

■

■

$T_{MIN} \le T_A \le T_{MAX}$ $-40°C \le T_A \le 85°C$

$1.8V \le V_{DD} \le 6.0V$

■

■

SOT-23-3L

■

LN245MR	M	SOT-23-3	45XY

■

AC/DC VDD=3V T_a=25

V_{DD}		—	1.8	—	6.0	V
I_{SAVG}			100	350	1000	uA
I_{SOPAVG}			0.5	2.0	3.5	mA
I_{SOPT}					4.5	mA
I_{SSTB}			1	1.9	8	uA
V_{QSAT}		IQ=1mA		0.13	0.4	V
I_{QLEAK}				0.01	1	uA
t_r		R_L=2.7KΩ C_L=10pF		0.5	1	us
r_f		R_L=2.7KΩ C_L=10pF		0.1	1	us
t_{op}			55	85	120	us
t_{stb}			250	350	550	us
t_{op}/t_{stb}				20		%
t_{stu}				12	20	us

■

V_{DD}=2.7V T_a=25

■

SOT-23-3

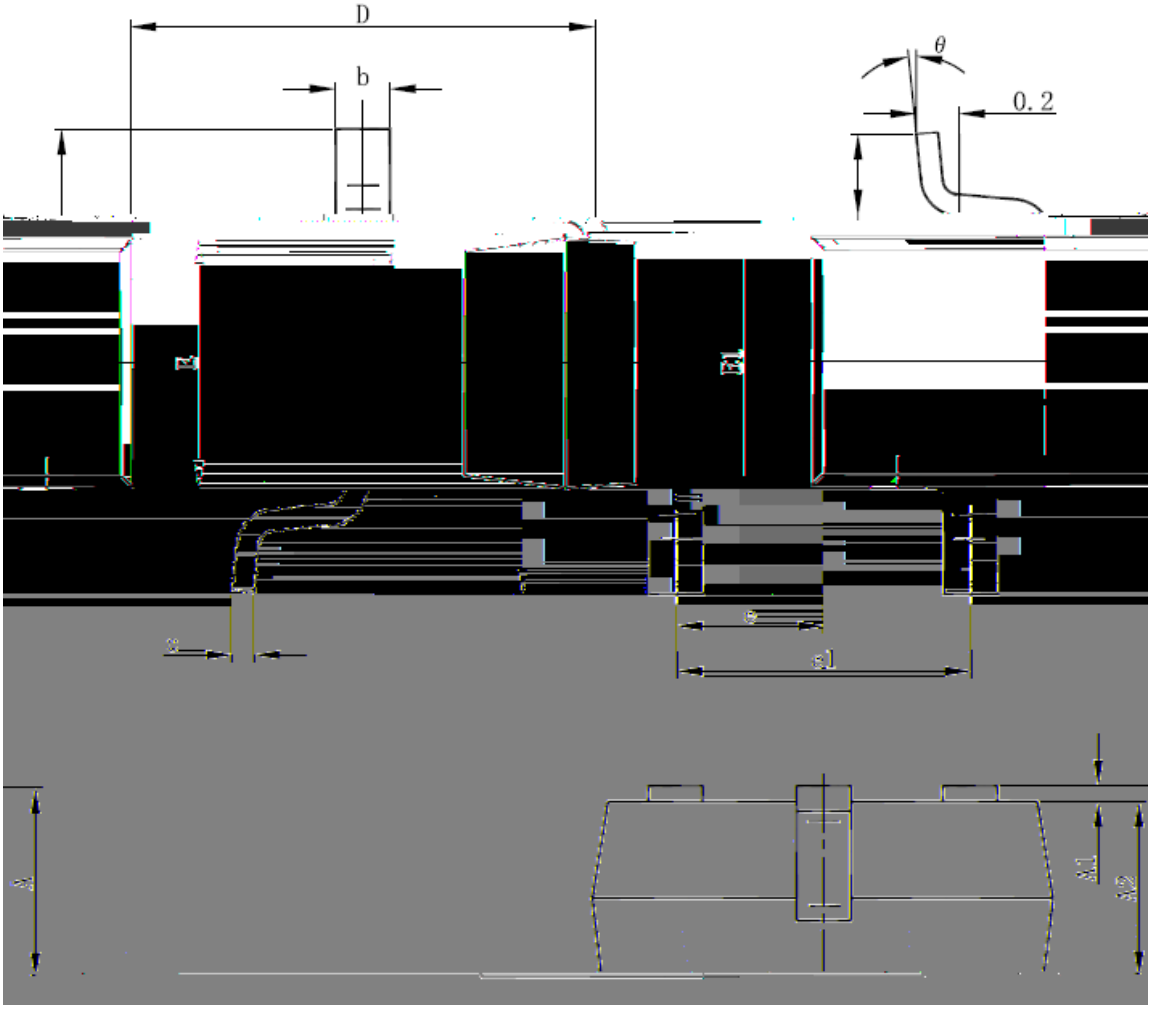

	Dimensions In Millimeters			Dimensions In Inches	
	Max		Min	Max	
041	0.049	A	1.050	1.250	0.
000	0.004	A1	0.000	0.100	0.
041	0.045	A2	1.050	1.150	0
[illegible]	[illegible]	[illegible]	[illegible]	[illegible]	[illegible]
[illegible]	[illegible]	[illegible]	[illegible]	[illegible]	[illegible]
240	0.111	0.119	2.820	2.820	3
2.650	2.950	0.104	0.116	E1	
0.950(BSC)		0.037(BSC)		e	
1.800	2.000	0.071	0.079	e1	
0.300	0.500	0.012	0.024	L	