20V N-Channel Enhancement Mode MOSFET

Description

The NP2040D3 uses advanced trench technology to provide excellent $R_{DS(ON)}$ and low gate charge.It can be used in a wide variety of applications.

General Features

- V_{DS} and low 2(E)-1(58-0.002 T200.09 Tw 1.64 0 BDC 008B 0 15 51.77 <</Att<02C8 1.011 0 Td (V TwC -0.004 Tc 0.004 Tw 7.65 92.82 DS)-4(()-4(O)53.222<</MCID 295

	Storage Temperature	Package	Devices Per Reel
NP2040D3-G	-55°C to +150°C	PDFN3.3*3.3-8L	5000

Absolute Maximum Ratings (TA=25 unless otherwise noted)

parameter	symbol	limit	unit
Drain-source voltage	$V_{DS\ 0\ Td\ (20)Tj\ 0\ 0}$	20	

Electrical Characteristics (TA=25 unless otherwise noted)

Parameter	Symbol	Condition		Min	Typ	Max	Unit
Static Characteristics							
Drain-source breakdown voltage	BV_{DSS}	V_{GS}=0V, I_D=250μA		20	-	-	V
Zero gate voltage drain current	I_{DSS}	V_{DS}=20V, V_{GS}=0V	T_J=25°C	-	-	1	μA
			T_J=85°C	-	-	5	
Gate Leakage Current	I_{GSS}	V_{DS}=0V, V_{GS}=±12V		-	-	±100	nA

Typical Performance Characteristics

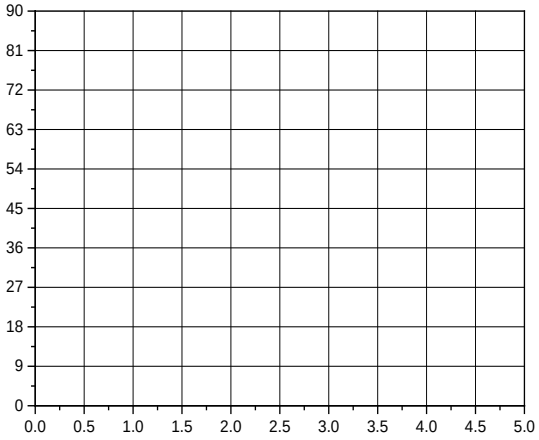

Fig1 Output Characteristics

Fig2 Transfer Characteristics

Fig3 Rdson-Drain current

Fig4 Capacitance vs Vds

Fig5 Rdson-Gate Drain voltage

Fig6 Gate Charge

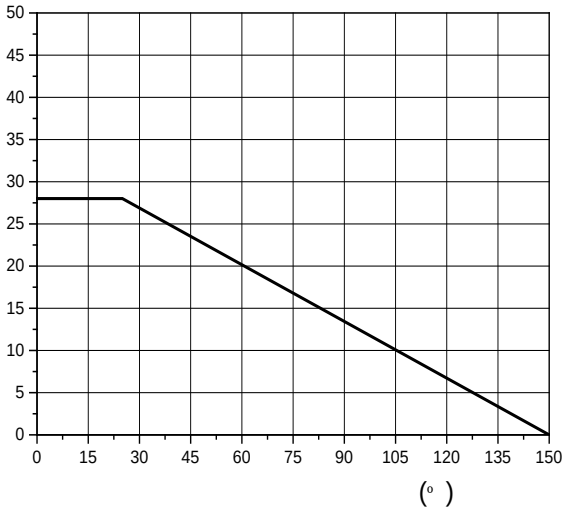

Fig7 Power De-rating

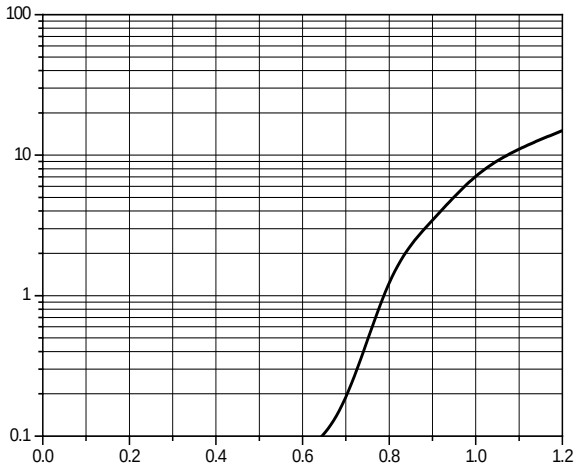

Fig8 Source-Drain Diode Forward

Package Information

- **PDFN3.3*3.3-8L**

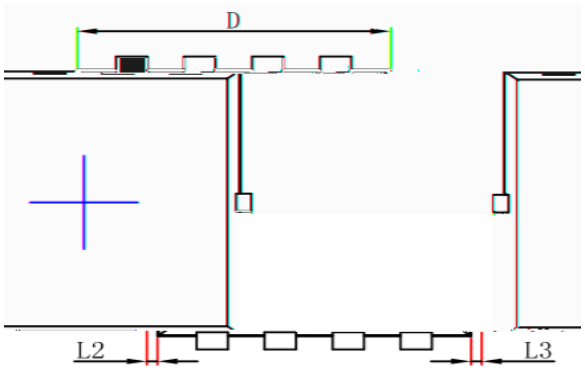

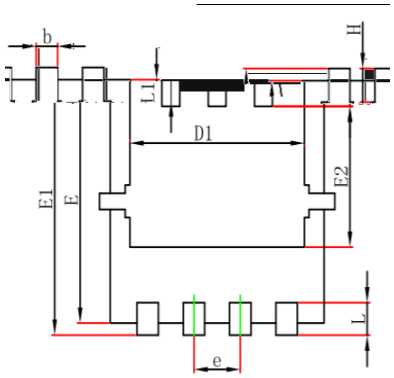

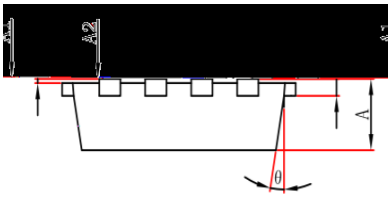

	2.600	0.091	0.102	
			0.122	
	3.150	3.450	0.124	0.136
	1.535	1.935	0.060	0.076
	0.400	0.008	0.016	b 0.200
0.022	0.030	e	0.550	0.750
	L2			0~0.004
L3		0~0.100		0~0.004
θ	9°	13°	9°	13°