Ultra low IQ Synchronous Boost Connyre



Functional Pin Description

Package Type	Pin Configurations
SOT23-6	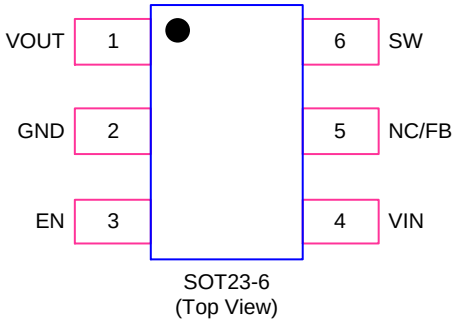

SOT23-6
(Top View)

Pin Description

Pin No.	Name	Description
1	VOUT	Voltage output pin.
2	GND	Ground pin.
3	EN	Chip enable pin. Logic high voltage enables the device; logic low voltage disables the [illegible]e. Do not leave it floating.
4	VIN	[illegible]oltage supply input pin.
5	NC (LP6261)	No Connect

Absolute Maximum Ratings Note 1

VIN and EN to GND ---------- 6.5V
VOUT to GND ---------- 8V
SW to GND ---------- 10V
Maximum Junction Temperature ---------- 150°C
Operating Ambient Temperature Range (T_A) ---------- -40 to 85°C
Maximum Soldering Temperature (at leads, 10 sec) ---------- 260°C

Note 1.



Electrical Characteristics

(V_{IN}=3.5V, V_{OUT}=5V, C_{IN}=10uF, C_{OUT}=22uF, L=2.2uH)

Parameter	Condition	Min	Typ	Max	Units
Output Voltage	LP6261B6F	5.0	5.1	5.2	V
Feedback Voltage	LP6261AB6F	1.333	1.36	1.388	V
Supply Voltage		1		5	V
Input UVLO	I_{OUT}=1mA		0.8		V
Supply Current	V_{EN}=High, V_{IN}=5V, No load		1		uA
Supply Current(Shutdown)	V_{EN}=0V, V_{IN}=5V		0.05	1	uA
Switching Frequency			1200		KHz
EN Input Low Voltage				0.3	V
EN Input High Voltage		1.4			V
EN Input Current	V_{EN}=5V		0.1		uA



Typical Operating Characteristics

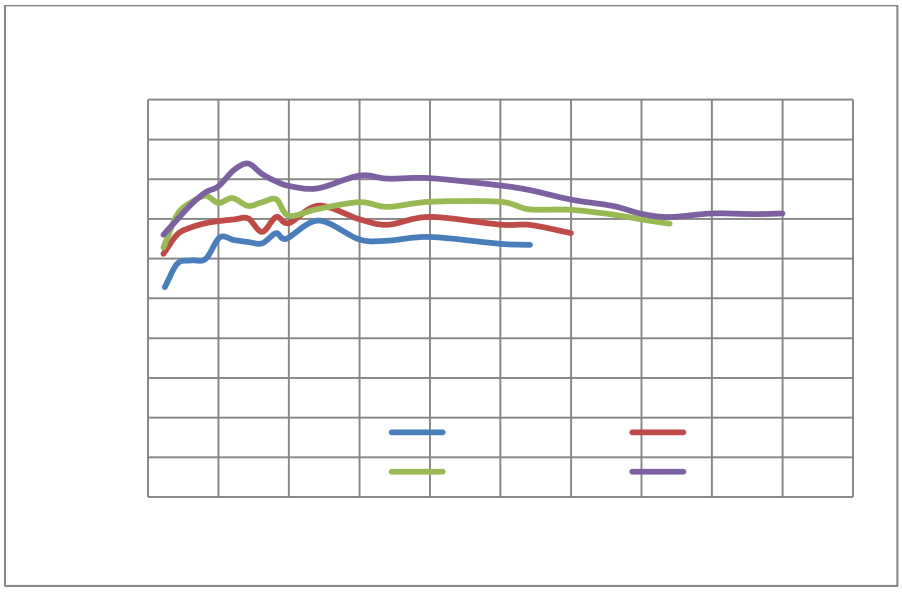



Application Information

The LP6261 uses a synchronous 1.2MHz fixed frequency with 1uA ultra-low quiescent current. It is designed for alkaline battery, coin-cell battery, Li-ion or Li-polymer battery powered systems, which



Packaging Information

SOT23-6

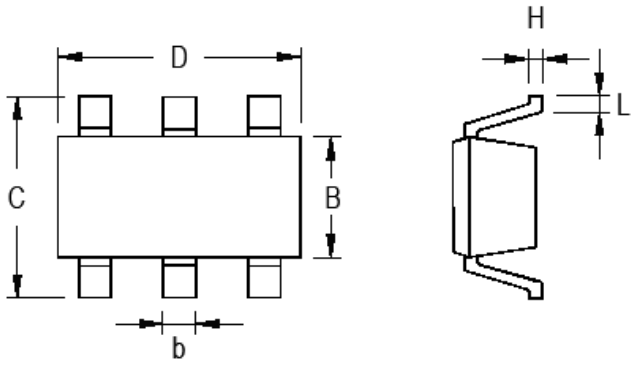

Symbol	Dimensions In Millimeters		Dimensions In Inches	
	Min	Max	Min	Max
A	0.889	1.295	0.031	0.051
A1	0.000	0.152	0.000	0.006
B	1.397	1.803	0.055	0.071
b	0.250	0.560	0.010	0.022
C	2.591	2.997	0.102	0.118
D	2.692	3.099	0.106	0.122
e	0.838	1.041	0.033	0.041
H	0.080	0.254	0.003	0.010
L	0.300	0.610	0.012	0.024