1MHz DC/DC

■

LN2242 DC/DC
PWM
1.5A
95

■

95
1MHz
0.9V
PFM/ PWM
EMI
20uA

■

SOT23-6L

■



■

LN2242P -

	AD	
	XX	33 3.3V
	M	SOT23-6L

1	LX	
2	GND	
3	FB	
4	EN	1M
5	VOUT	
6	VIN	

■

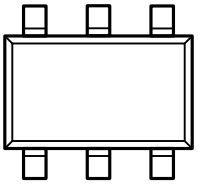

SOT23-6L
(TOP VIEW)

S	LN2242P

AD	
XX	33 3.3V

0-9 A-Z; 0-9 A-Z G I J O Q W

■



■

	V_{IN}	-0.3 6.5		V
	V_{LX}	-0.3~6.5		
	$V_{EN,FB,VOUT}$	-0.3 6.5		
	P_D	SOT23-6L	300	mW
	Topr	-40 +85		°C
	Tstg	-40 +125		
(10s)	Trefl	250		°C

■

VOUT=3.3V Ta=25

■

1 VS

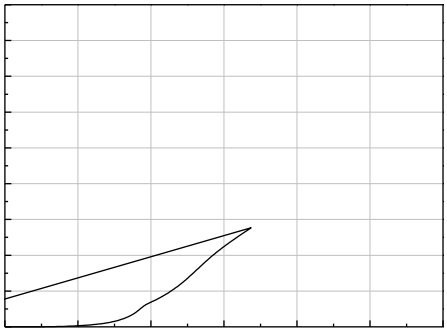

2 VS

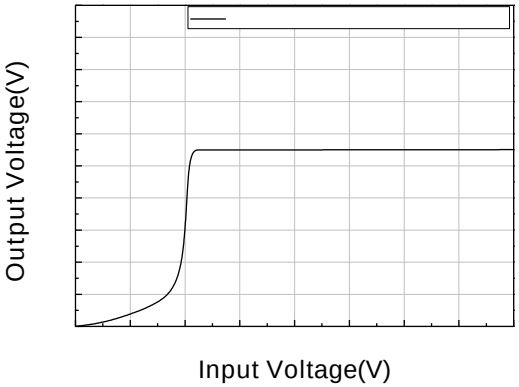

3 VS

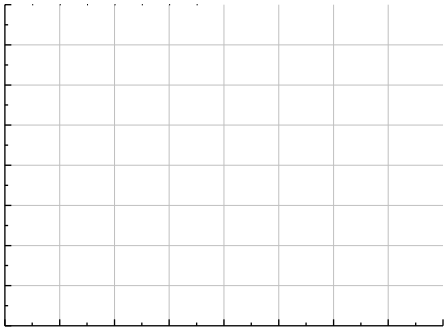

4 VS

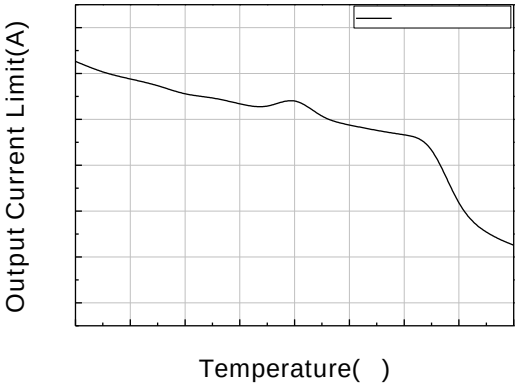

5 VS : Vin=CE VOUT=3.3V IL=1mA

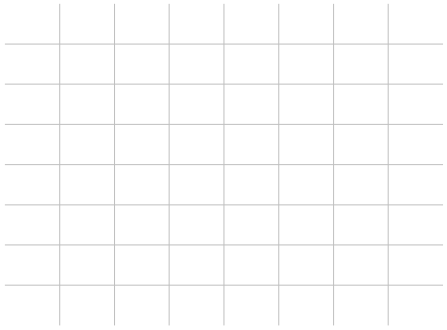

6

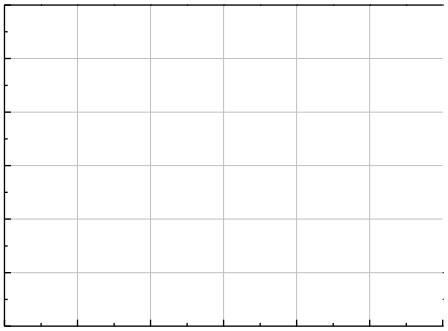

7

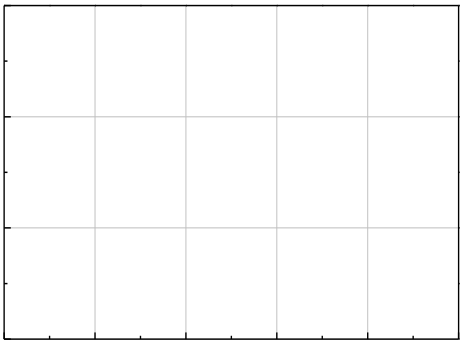

8 PFM V_{IN}=2.5V, V_{OUT}=3.3V, I_{LOAD}=10mA

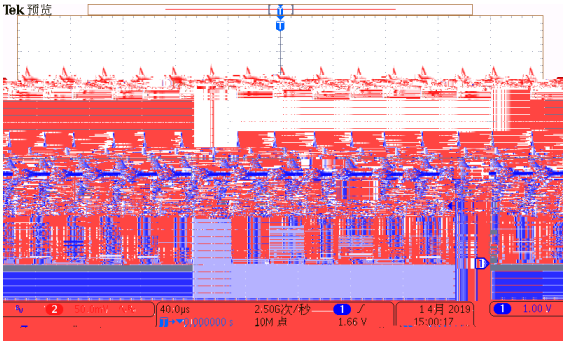

9 PWM V_{IN}=2.5V, V_{OUT}=3.3V, I_{LOAD}=500mA

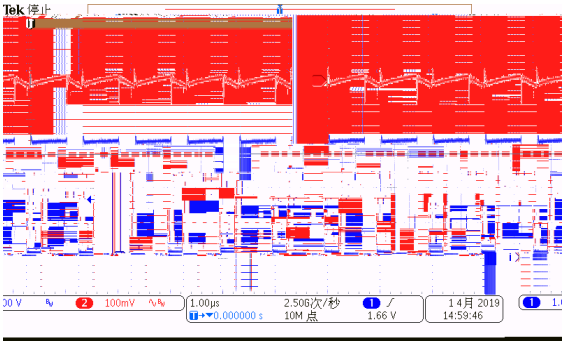

■

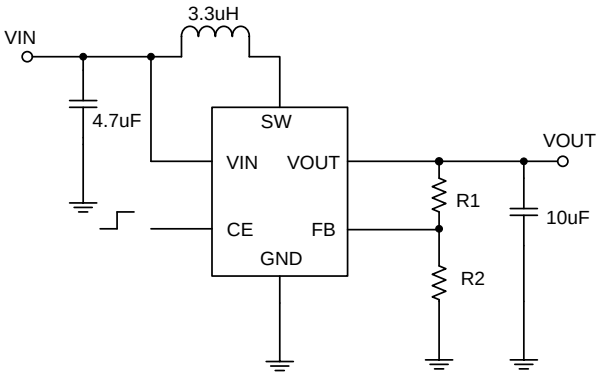

FB

$$VOUT \quad VFB \quad 1 \quad \frac{R1}{R2}$$

VFB=600mV R2 K

2.2uH 10uH DCR

4.7uF 10uF

PCB

PCB

VIN L VOUT

LX

■

SOT23-6L

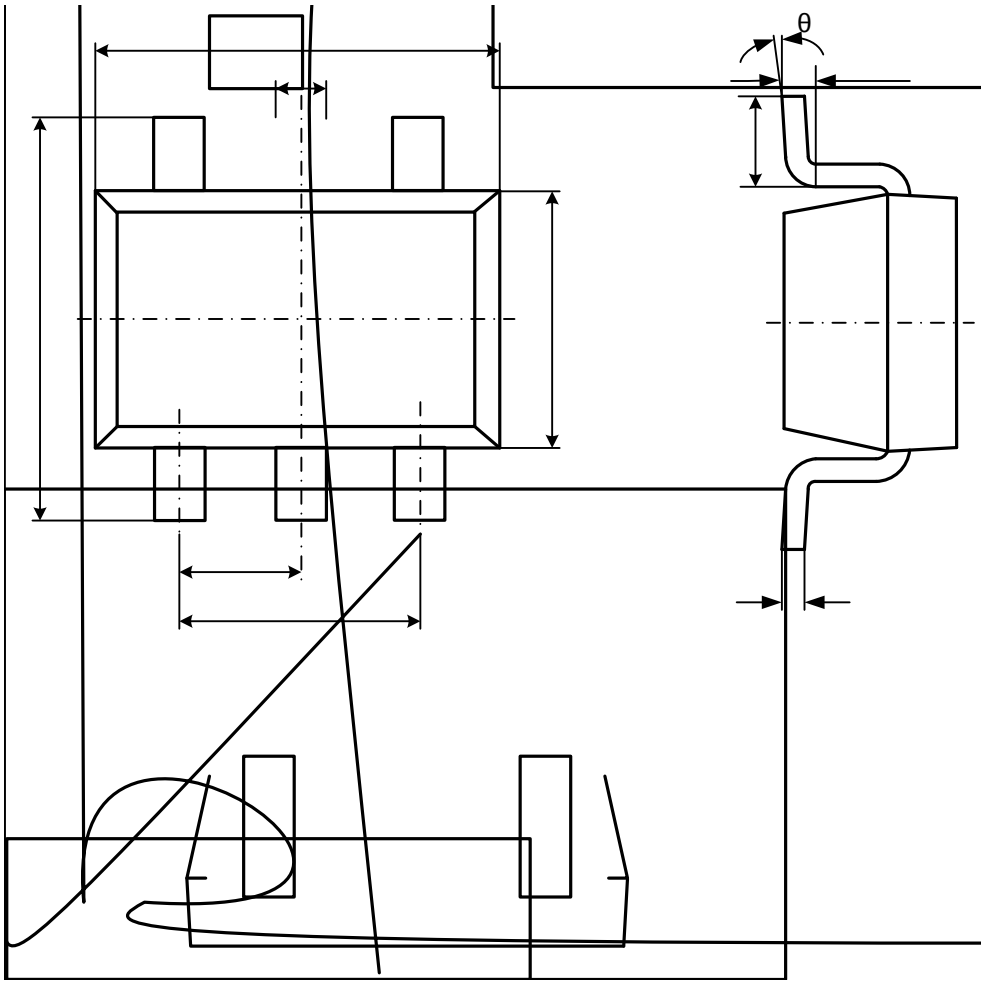

Symbol	Dimensions In Millimeters		Dimensions In Inches	
	Min	Max	Min	Max
Z	1.050	1.250	0.041	0.049
A1	0.000	0.100	0.000	0.004
A2	1.050	1.150	0.041	0.045
b	0.300	0.500	0.012	0.020
c	0.100	0.200	0.004	0.008
D	2.820	3.020	0.111	0.119
E	1.500	1.700	0.059	0.067