300mA CMOS

■

LN1138

■

AV

■

1.5 5.0V ,
0.1 V
2.0%
300 mV (3.0V
, IOUT=100mA)
60dB (1 kHz)
60 A TYP.
300mA VIN VOUT+1V

■

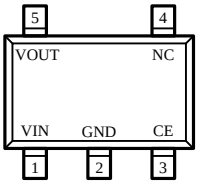

SOT23-5L/SOT-353
(TOP VIEW)

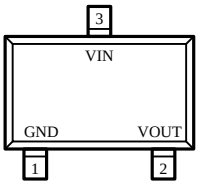

SOT23-3L
(TOP VIEW)

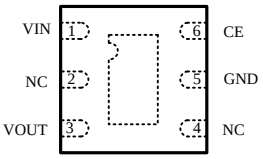

DFN2020-6L
(TOP VIEW)

■

SOT23-5L,SOT-353	SOT23-3L	DFN2020-6L		
1	3	1	VIN	
2	1	5	GND	
3	/	6	CE	
4	/	2 4	NC	
5	2	3	VOUT	

■

SOT23-5L,SOT-353,SOT23-3L

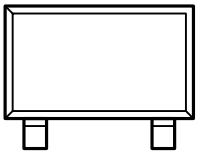

4	LN1138

(V)	1.0 3.0	3.1 6.0	1.05 3.05	3.15 6.05	
	V	A	E	L	LN1138A
	X	B	F	M	LN1138B
	Y	C	H	N	LN1138C
	Z	D	K	P	LN1138D

	V			
0	-	3.1	-	3.15
1	-	3.2	-	3.25
2	-	3.3	-	3.35
3	-	3.4	-	3.45
4	-	3.5	-	3.55
5	-	3.6	-	3.65

	V			
F	1.6	4.6	1.65	4.65
H	1.7	4.7	1.75	4.75
K	1.8	4.8	1.85	4.85
L	1.9	4.9	1.95	4.95
M	2.0	5.0	2.05	5.05
N	2.1	-	2.15	-

	V			V	

■

(TA=25 unless otherwise noted)

8



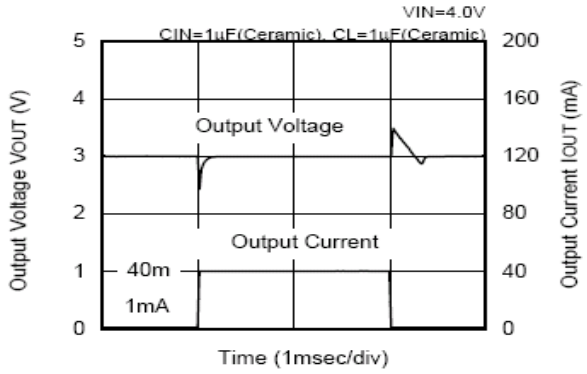

■

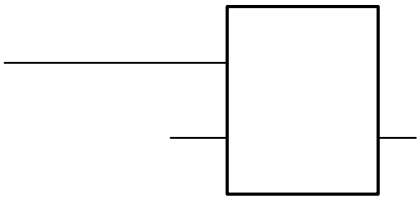

1uF

PCB

PCB

VIN VOUT

PCB

■

SOT23-5L

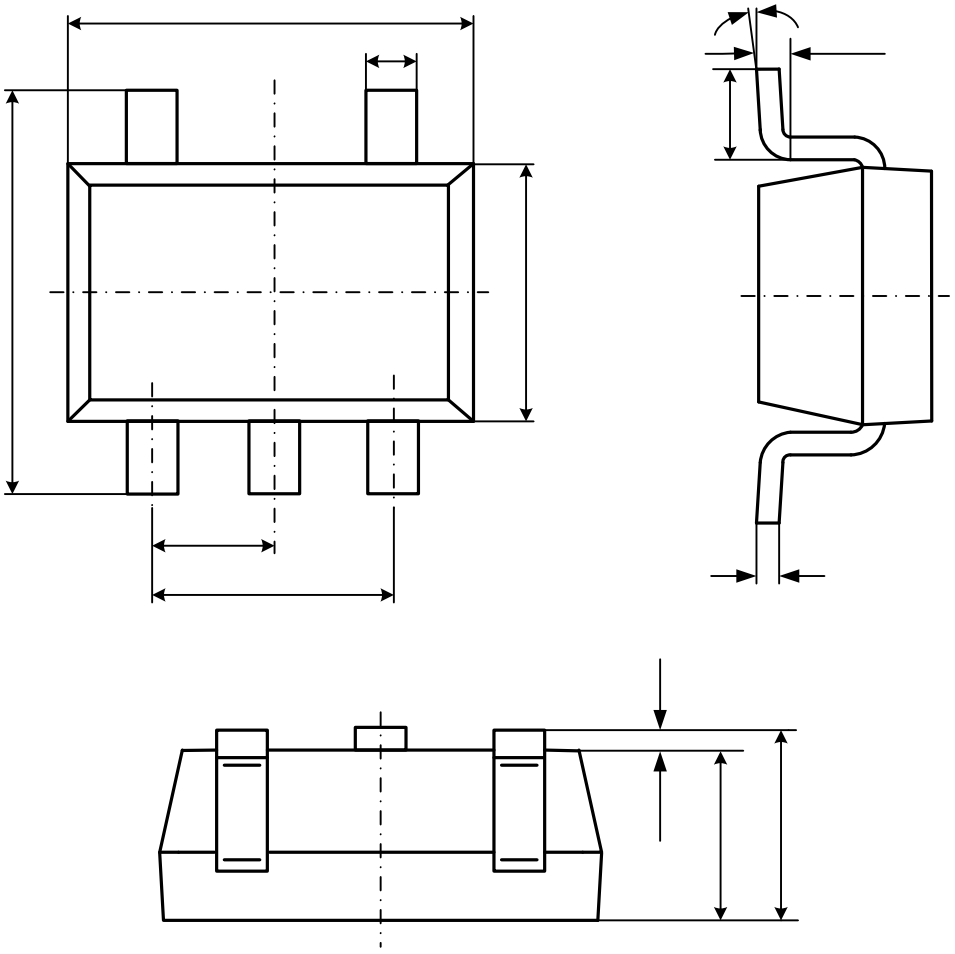

Symbol	Dimensions In Millimeters		Dimensions In Inches	
	Min	Max	Min	Max
A	1.050	1.250	0.041	0.049
A1	0.000	0.100	0.000	0.004

SOT-353

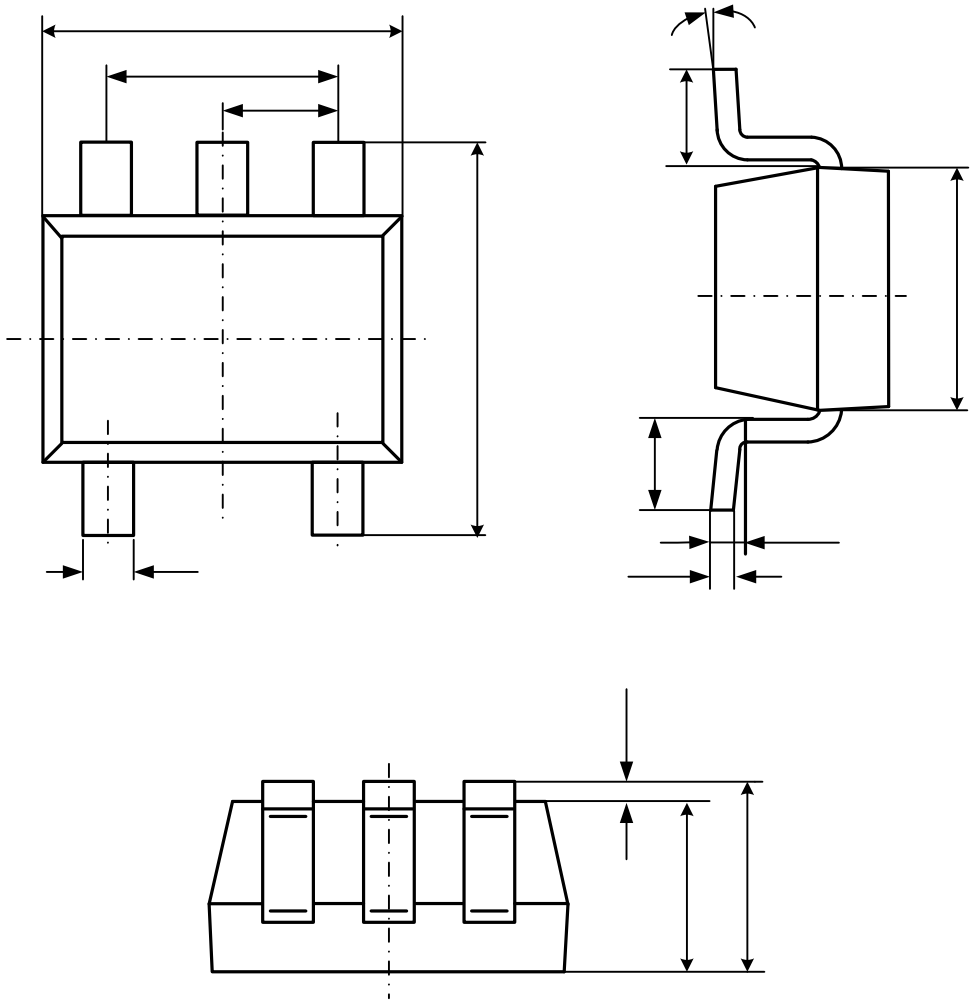

Symbol	Dimensions In Millimeters		Dimensions In Inches	
	Min	Max	Min	Max
A	0.900	1.100	0.035	0.043
A1	0.000	0.100	0.000	0.004
A2	0.900	1.000	0.035	0.039
b	0.150	0.350	0.006	0.014
c	0.080	0.150	0.003	0.006
D	2.000	2.200	0.079	0.087
E	1.150	1.350	0.045	0.053
E1	2.150	2.450	0.085	0.096
e	0.650TYP		0.026TYP	
e1	1.200	1.400	0.047	0.055
L	0.525REF		0.021REF	
L1	0.260	0.460	0.010	0.018
	0°	8°	0°	8°

DFN2020-6L

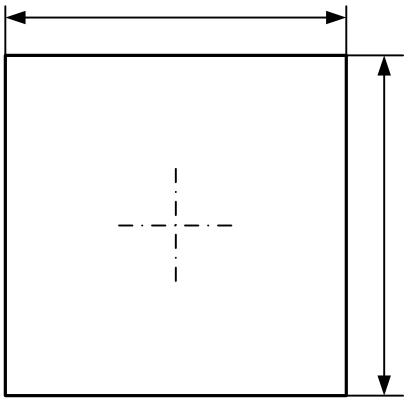

Top View

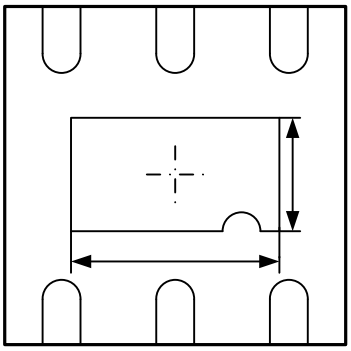

Bottom View

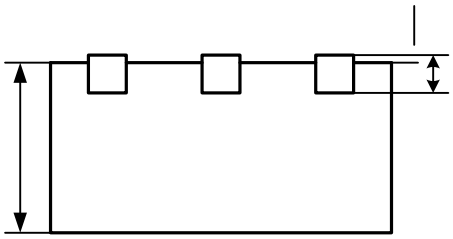

Symbol	Dimensions In Millimeters		Dimensions In Inches	
	Min	Max	Min	Max
A	0.700/0.800	0.800/0.900	0.028/0.031	0.031/0.035
A1	0.000	0.050	0.000	0.002