General Description

The OCH1661Omnipolar Hall effect sensor IC is fabricated from mixed signal CMOS technology. It is comprised of two Hall plates and a CMOS output driver, mainly designed for battery-operation. The total power consumption in normal operation is typically 3.6μW with a 1.8V power source and 18.5μW with a 5V power source. Either north or south poles of suffici

17 d6 T45uBT4eti- Gl 5▷34mB G[CMO)-15(S)]TJETO EMC /Sp5 power

Ordering Information

Part Number	Package Type	Packing Qty	B_{OP} (Gauss)	B_{RP}(Gauss)	Temperature	Eco Plan	Lead
OCH1661WAD	SOT23-3L	3000pcs/Reel	±40(Typ.)	±30(Typ.)	-40~ +85°C	ROHS	Cu
OCH1661MD	SIP-3L	1000pcs/Bag	±40(Typ.)	±30(Typ.)	-40~ +85°C	ROHS	Cu

Block Diagram

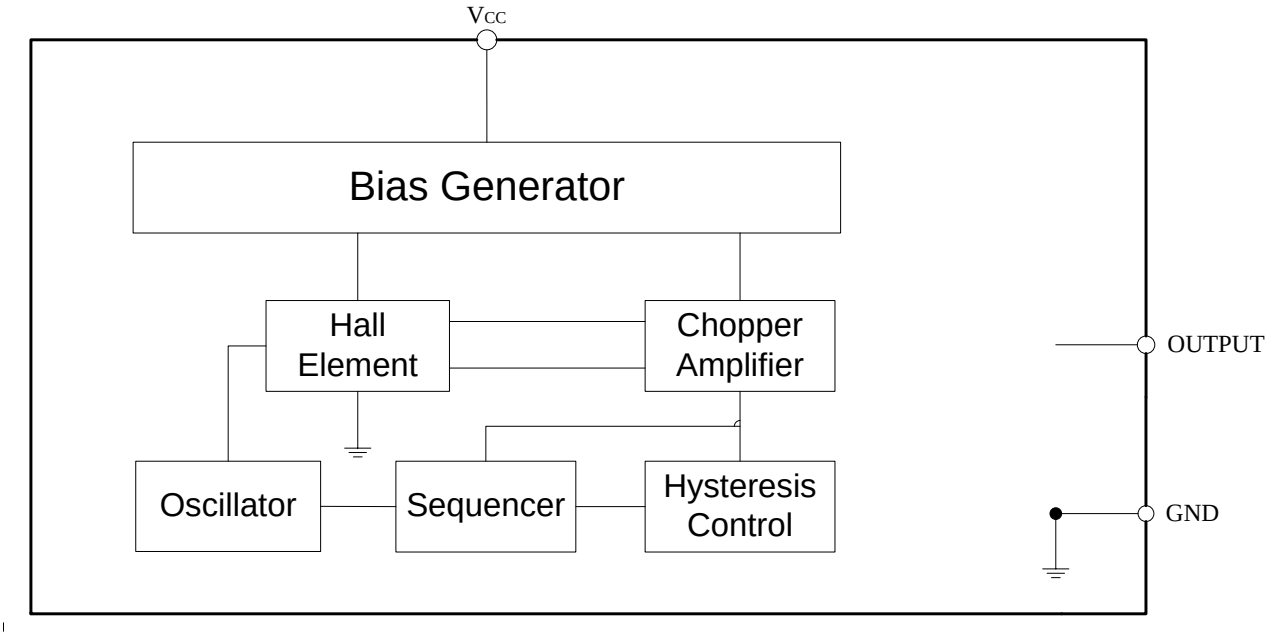

Figure 2, Block Diagram Of OCH1661

Absolute Maximum Ratings (T_A=25°C unless otherwise noted)

Parameter	Symbol	Rating	Unit
V_{CC} to GND	V_{CC}	-0.3 to6	V
Magnetic Flux Density	B	Unlimited	

Electrical Characteristics

Symbol	Parameter	Conditions	Min.	Typ.	Max.	Unit
V_{OH}	Output On Voltage (High side)	T_A=-40~85°C, V_{DD}= 1.65~5.5V I_{OUT}=+1mA	V_{DD}-0.3	V_{DD}-0.02	V_{DD}	V
V_{OL}	Output On Voltage (Low side)	T_A=-40~85°C, V_{DD}= 1.65~5.5V I_{OUT}=-1mA	-	0.01	0.1	V
I_{cc}(EN)		Chip enable, T_A=25°C, V_{DD}= 1.8V		0.5	1.2	[redacted]
I_{cc}(EN)		Chip enable, T_A=25°C, V_{DD}= 5V	-	1.1	1.8	mA
I_{cc}(EN)		Chip enable, T_A=-40~85°C, V_{DD}= 1.65~5.5V	-	1.1	2.6	mA
I_{cc}(DIS)		Chip disable, T_A=25°C, V_{DD}= 1.8V		0.8	2	μA
I_{cc}(DIS)	Supply Current	Chip disable, T_A				

[redacted]

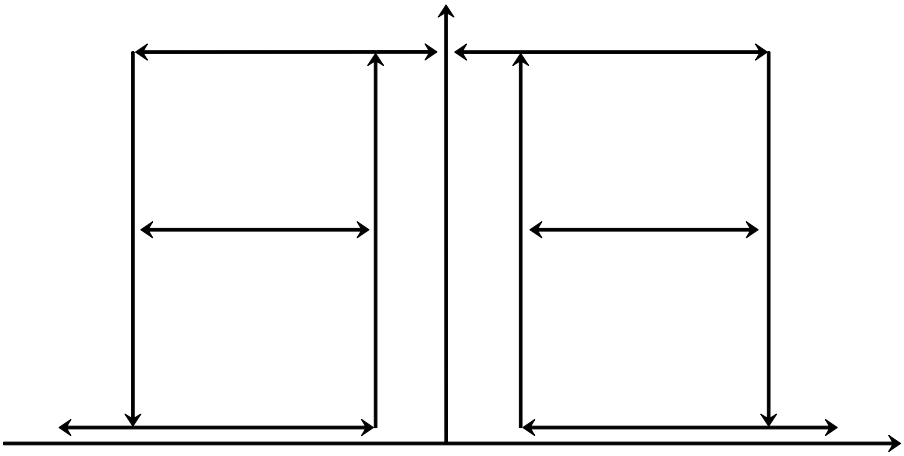

Figure 3, Magnetic Operational Characteristics Of OCH1661

Hall Sensor Location

(Top View)

Orientation	Value	Unit

SOT23-3L SIP-3L

Figure4, Hall Sensor Location

Land Pattern (for reference only)

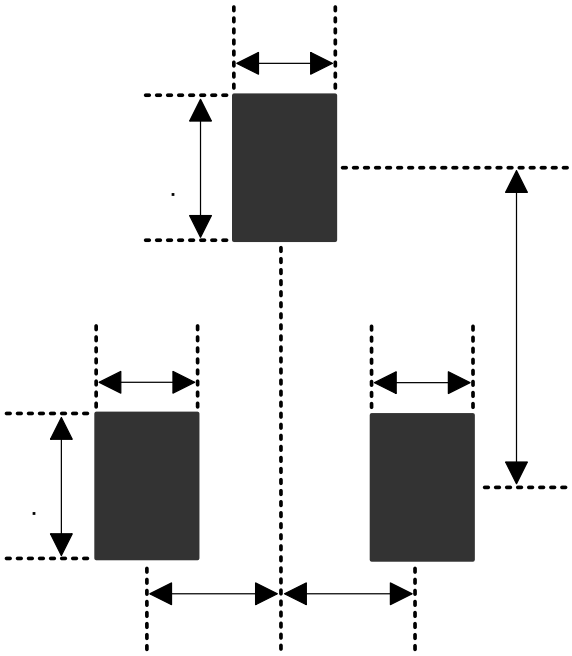

Figure 5, Land Pattern Dimension (SOT23-3L)

Marking Information

(Top View)

SOT23

Package Information

2) SIP-3L

Symbol	Dimensions In Millimeters			Dimensions In Inches		
	Min.	Typ.	Max.	Min.	Typ.	Max.
A	2.90	3.00				

IMPORTANT NOTICE

Shanghai Orient-Chip Technology Co., Ltd. (OCS) and its subsidiaries reserve the right to make corrections, modifications, enhancements, improvements, and other changes to its products. Customers should obtain the latest relevant information before placing orders and should verify that such information is current and complete. These separate provisions won't be provided.